DEX210 V2

Contents

Before you begin .3.
Assembly .3.
Safety Notes – IMPORTANT .4.
Symbol Reference Key .7.
Assembly Instructions .9.
Exploded View .58.
Parts List Standard Parts .71.
Parts List Option Parts .72.
Team Durango Ltd .75.

Inhaltsverzeichnis

Bevor Sie anfangen .3.
Zusammenbau .3.
Sicherheitswarnungen – WICHTIG .5.
Symbol Schlüssel .7.
Montage Anleitung .9.
Explosionsansicht .58.
Ersatzteileliste .71.
Tuningteileliste .72.
Team Durango Ltd .75.

目次

はじめに .3.
組立て前に .3.
安全のために –重要 ! .5.
シンボルリファレンス .7.
組立て .9.
展開図 .58.
パーツリスト .71.
オプションパーツリスト .72.
Team Durango Ltd .75.

目錄

组装前说明 .3.
组装 .3.
安全须知 – 重要 ! .6.
说明书符号说明 .7.
组装步驟 .9.
爆炸圖 .58.
一般件零件表 .71.
改装件零件表 .72.
Team Durango 連絡信息 .75.

Before you begin *Bevor Sie anfangen* はじめに　组装前说明

This manual contains detailed step-by-step instructions to show you how to assemble and set-up your new DEX210v2 for optimum performance. We want you to get the most out of your new racing machine, so we suggest that you read this manual through, from cover to cover, before beginning assembly. All Team Durango products are manufactured to the highest possible standards, so should you find any parts difficult to assemble, please check that you are assembling them correctly.

If you don't follow these instructions exactly, you may damage parts of your DEX210v2.

If, for any reason, you decide that you do not want your DEX210v2, **you must not begin assembly.** Your DEX210v2 cannot be returned to your Team Durango dealer for a refund or exchange if it has been fully or partially assembled.

Diese Bauanleitung beinhaltet detallierte Step by Step Anweisungen, die Ihnen zeigen, wie Sie Ihren neuen DEX210v2 zusammenbauen und einstellen müssen, um die optimale Leistung zu erreichen. Wir möchten, dass Sie das Maximum aus Ihrer neuen Renn-Maschine herausholen können und bitten Sie, diese Bauanleitung vorn bis hinten durchzulesen, bevor Sie mit dem Zusammenbau beginnen. Alle Team Durango Produkte werden in den höchstmöglichen Standards produziert. Sollten Sie ein schwierig zu montierendes Bauteil finden, prüfen Sie bitte, ob es sich um das richtige Teil handelt und ob Sie es richtig montiert haben.
Wenn Sie Ihr Fahrzeug nicht nach der Bauanleitung zusammenbauen, könnten Sie Ihren DEX210v2 beschädigen.

Wenn Sie aus bestimmten Gründen Ihren DEX210v2 nicht haben wollen, müssen Sie ihn nicht zusammenbauen. Ihr DEX kann nicht von Ihrem Team Durango Händler zurück genommen werden, wenn das Fahrzeug ganz, oder auch teilweise montiert wurde.

このマニュアルではDEX210v2の組立てに必要な説明をステップバイステップで行い、更に最高のパフォーマンスを引き出す組立方法を記載しています。本製品はこれまでのレーシングマシンとは一線を画す全く新しいマシンですので、組立前に本マニュアルを全ページ読まれる事をお薦めします。Team Durangoの全てのマシンは高い品質管理の元に製造されている為、万一組立の際にうまく組付けが出来ない場合には説明書通りの手順で組立てられているか確認してください。

本説明書通りに組付けを行わなかった場合、DEX210v2のパーツを破損する恐れがあります。

万一、何らかの理由でDEX210v2を返品される場合には組立を始めないでください。DEX210v2はその全部又は一部でも組立てられていると返金・交換には一切応じられませんのでご注意ください。

本说明书有详细的组装与调校教学，您可依照说明书的教学，来完成最适合您操作的车体设定。我们希望您能够调校出属于您的绝佳设定，所以在开始组装前，请务必先详读说明书的组装与调校教学。所有的Team Durango都是以顶级的生产标准加工制成的，所以，当您发现在组装上有任何问题的时候，请您再核对您的说明书内容，确定您是以正确的组装方式来进行组装。

若是以说明书教学以外的方式来加工或组装，您的DEX210v2可能会因错误的组装方式而导致不必要的损伤。
若您因为某些需求而需要退还您的DEX210v2，则请勿有任何组装动作。
所有的Team Durango的贩卖商均不对已组装使用的产品负起更换或退还责任。

Assembly *Zusammenbau* 組立て前に　组装

Contained in your DEX210v2 box are different parts bags. Each bag is marked with a number. Within each bag are all the parts required to complete a build-stage of the kit. As noted in 'Before you begin' (above), you must ensure that you only open one bag at a time, following the correct sequence of assembly.

Before starting each build-stage, check that you have the right quantity and size of items for the build-stage. To assist you with the assembly of your DEX210v2, we have included full-size images of all the hardware parts laid out, so that you can place items on top of the images to check they are the correct size/length. Other items, such as those found on the mould tree, are also shown, but are not full-size.

Der Inhalt Ihres DEX210v2 Baukastens enthält verschiede Teile-Beutel. Jeder Beutel ist mit einer Nummer markiert. In jedem Beutel sind genau die Teile, die sie für den Zusammenbau eines Bauabschnittes benötigen. Stellen Sie sicher, dass jeweils immer nur ein Beutel geöffnet ist, folgend der Baustufen.

Bevor Sie mit dem Zusammenbau beginnen, stellen Sie sicher, dass alle benötigten Teile im Beutel enthalten sind. Um Ihnen zu helfen, haben wir alle Teile in Originalgröße abgebildet. So können Sie Ihre Teile im Zweifel auf die Abbildung legen, um die Größe/Dimension zu prüfen. Andere Teile, wie Teile eines Plastik-Baums sind auch zu sehen, aber nicht in voller Größe.

DEX210v2のボックスにはそれぞれの組立てステップに応じたパーツバッグが入っております。それぞれのパーツバッグには番号がマークされています。各バッグにはそれぞれの組立ステージに応じたパーツが必要なだけパッケージされています。各組立ステージに必要なパーツバッグだけをステップに応じて開封してください。

各組立ステージを開始する前に使用するパーツが必要数入っているか確認してください。本説明書には各パーツの実物大画像を記載しています。正しいパーツ（サイズ）かどうか不安な場合にはこの画像に実際のパーツを重ね合わせる事で確認が可能ですので活用してください。

您的DEX210v2由不同的零件包将各项零件分开包装。每个零件包都有标示编号，每个零件包都是一个单一组成程序所转化的。如同「组装前说明」所提到，请确定您每次的组装程序都只开启需要的零件包，并遵照教学内容指示进行组装程序。

在组装之前，请先确认您的零件数量与规格都和说明书的指示一样。为了更有效地协助您完成DEX210v2的组装，我们会在说明书上印出与零件实际尺寸相同的示意图，以便您比对零件的规格尺寸是否正确。由于塑料零件的尺寸偏大且易于辨识，我们将只展示其相关示意图但不会以实际比例展出。

Safety Notes – IMPORTANT

THIS KIT IS NOT A TOY.

This kit is not intended for use by anyone under the age of 14. For anyone under 14, adult supervision and assistance is recommended when building and operating the kit.

This kit is a high-performance radio controlled model racing product and could cause harm and personal injury. Team Durango Ltd accept no responsibility for any injuries caused by using or making this kit.
This kit is designed for use on r/c car race tracks. It should not be used in general public areas. Team Durango Ltd accept no responsibility for any injuries caused by making or using this kit.

Please read this manual carefully to understand which ancillary items (tools, electrics, electronics etc) are used with this kit. Team Durango Ltd accept no responsibility for the operation of any such ancillary items.

It is entirely the owner's responsibility to ensure this product is in good working order before operation.

Many of the items in this kit are small enough to be accidentally swallowed and are, therefore, potential choking hazards, making them potentially fatal. Please ensure that when assembling the kit, you do so out of the reach of small/young children.

All liquids etc contained in the kit are not intended for human consumption. Should you swallow any of the fluids supplied with the kit (such as shock oil, differential grease etc), please consult a physician immediately. Some of these liquids etc are flammable. Never smoke, cause sparks or excessive heat near these items. Team Durango Ltd accept no responsibility for any injuries caused by any of the parts contained within or required to make the kit.

Never touch rotating parts of the car as this may cause injury.

Do not run your car in poor light or if it goes out of sight. Any impairment to your vision may result in damage to your car or, worse, injury to others or their property.

As a radio controlled device, your car is subject to radio interference from things beyond your control. Any such interference may cause a loss of control of your car, so please consider this possibility at all times.

Sicherheitswarnungen – WICHTIG

Dieses Fahrzeug ist kein Spielzeug

Dieser Baukasten ist nicht geeignet für Jugendliche unter 14 Jahren. Bei Jugendlichen unter 14 Jahren muss eine erwachsene Person für den Zusammenbau und den Betrieb des Modells anwesend sein.

Dieses Modell ist ein Hochleistung Wettbewerbsfahrzeug und könnte erheblichen Schaden und Verletzungen hervorrufen. Team Durango Ltd übernimmt keinerlei Haftung für eventuelle Schaden, die beim Zusammenbau, oder Betrieb des Modells hervorgerufen werden.

Dieses Modell ist für den Betrieb auf Rennstrecken ausgelegt. Es sollte nicht auf öffentlichen Bereichen betrieben werden. Team Durango Ltd übernimmt keine Verantwortung für den Zusammenbau, oder Betrieb dieses Modells.

Bitte lesen Sie die Bauanleitung genau durch, um sicherzustellen, welche weiteren Werkzeuge, oder Elektronik zum Zusammenbau und Betrieb des Modells notwendig sind. Team Durango übernimmt keine Verantwortung für den Gebrauch dieser zusätzlichen Gegenstände.

Für den einwandfreien Zusammenbau und Betrieb ist Modells ist alleinig der Besitzer verantwortlich.

Einige der Bauteile sind sehr klein und könnten eingeatmet werden, was Erstickungen hervorrufen könnte. Stellen Sie sicher, dass keine Kleinkinder in die Nähe des Arbeitsbereichen kommen können.

Alle Flüssigkeiten des Baukastens sind nicht zum Verzehr geeignet. Sollten Sie eine Flüssigkeit versehendlich verschlucken, begeben Sie sich sofort zum Arzt.
Einige Teile des Baukastens sind leicht entzündlich. Rauchen Sie niemals beim Zusammenbau und Betrieb dieses Modells. Funken könnten Teile des Modells entzünden. Team Durango Ltd übernimmt keine Verantwortung für Verletzungen, die während des Zusammenbaus, oder Betrieb des Modells durch diese Dinge hervorgerufen werden können.

Berühren Sie niemals rotierende Teile des Modells. Dies könnte ernsthafte Verletzungen hervorrufen.

Betreiben Sie niemals das Modell bei schlechten Licht, oder wenn es außer Sichtweite ist. Jede Störung Ihrer Sicht, kann Ihr Modell beschädigen, oder schlimmer noch, Personen, oder Eigentum beschädigen.

Als ferngesteuertes Modell kann Ihr Modell Interferenzen ausgesetzt sein, die die Kontrolle des Modells stören können. Jegliche Interferenz kann Ihr Modell außer Kontrolle bringen. Bitte beachten Sie stets diesen Umstand.

安全のために -重要！

このキットは玩具ではありません

本製品の推奨年齢は14歳以上です。13歳以下のお子様が組立・ご使用になる場合には必ず保護者の監督・補助の元で作業を進めてください。

本製品は高性能な競技用のラジオコントロールカーです。使用方法を誤りますと怪我をする恐れがあります。 Team Durango Ltdは本製品を組立中、使用中に発生したいかなる怪我に対して責任を負うものではありません。

本製品はサーキット走行向けにデザインされており公共の場所（公園・駐車場等）での走行には適しません。

組立前に本マニュアルをお読み頂き、どのような工具・パーツが必要か理解して下さい。Team Durango Ltdは組立時に使用した工具等によるいかなる怪我・損害に対して責任を負うものではありません。

走行前には必ず本製品のチェックを行い、安全を確認してから走行を開始してください。R/Cカーの走行は全てお客様の責任の元に行ってください。

本製品は多数の小さなパーツを含んでおり、誤飲しますと窒息の可能性があり大変危険です。組立の際には必ず小さなお子様の手の届かない場所で作業してください。

本製品に含まれる液体・その他は飲物ではありません。万が一これら（ショックオイル、デフグリス等）を誤飲した場合にはすぐに医師の診察を受けてください。一部の液体は可燃性です。火気・炎を近づけたり投げ入れたりしないでください。Team Durango Ltdはキットに含まれるパーツや液体等で負ったいかなる怪我・損害に対して責任を負うものではありません。

回転しているパーツには怪我をする恐れがありますので絶対に触れないでください。

R/Cカーが視界の外に行った場合や薄暗い明りの元での走行は危険ですのでおやめください。視界の悪い状態で走行を続けますと走行中のR/Cカーを破損したり、他人に怪我を負わせたり、器物を破損する危険がありますのですぐに走行を中止してください。

R/Cカーの走行中は外部から発せられた電波等によりR/Cカーがコントロールを失う危険性が常にあります。R/Cカーの走行中は常に電波障害発生の危険性を考慮しながら走行してください。

安全须知－重要！

本产品非玩具类商品

本产品不适用于十四岁以下儿童，若您的年龄或者使用者是低于十岁以下的儿童，请确认在任何组装与操作时，有成年人陪同以防任何不慎造成遗憾。

本产品为高性能的遥控竞速模型，因于产品特性，若操作或使用不当时，可能引发对人体的伤害。Team Durango对于任何不当组装或操作上造成的意外不具任何责任。

本产品为专对遥控车模型赛道开发的竞赛车种。请勿在一般的开放地使用本产品。Team Durango对于任何不当使用上造成的意外不具任何责任。

请务必详读并了解说明书中关于各种相关辅助工具的使用方式。Team Durango对于任何辅助工具之不当使用所造成的意外不具任何责任。

本产品的实际性能表现，为用户事前调校与组装之责任。

由于部份零件尺寸较小，可能引起幼同吞食、咀嚼造成意外；请用户在组装或使用本产品时，确保幼童远离以房意外发生。

产品运作中，请勿触碰任何运作零件以防意外。

本产品所含之各种流质部品，均非人体所能吸收消化。若您不慎勿食流质部品，请务必立即向医疗单位寻求协助。部份流质产品俱有易燃性，请勿在流质部品旁吸烟，或是从事任何会引发热源上升或火花的行为。Team Durango对于任何不当使用流质产品所造成的伤害俱不负任何责任。

请勿在光线不足或是超出您视距外的情况下使用本产品。由于视线不良所造成的意外，都可能不慎引起您的车体或者其他物品上的损害。

由于电波干扰问题，您的车体可能会被任何非您所控制的电波讯号干扰。这些干扰电波可能会造成您的车体失控，请您在开使操作本产品前，确实考虑此一干扰因素。

SERIOUS ABOUT RACING

Symbol Reference Key *Symbol Schlüssel* シンボルリファレンス 说明书符号说明

The symbols below are used are various stages throughout the build of your kit. Paying close attention to these symbols, and following them properly, will ensure your kit is built properly.

Die untenstehenden Symbole werden Sie in den verschiedenen Baustufen wiederfinden. Bitte achten Sie auf diese Symbole und folgen Sie den Anweisungen, um einen korrekten Zusammenbau Ihres Modells zu gewährleisten.

下記のシンボル（記号）はキット組立の各ステージで使用されています。キットを正しく組立てる為にこれらのシンボルに注意しながら組立を進めてください。

列表中的符号将会在组装教学中出现。请您特别注意/了解这些符号的意义与出现位置。正确地遵照符号的指示，将会协助您正确地完成组装成序。

Symbol	Description (English)	Deutsch	Japanese	Chinese
	Assembly path of one item into another	Zusammenbau-Linie von einem Teil zum anderen	組付けてください	组装线/请依指示组装于另一物件上
	Press/Insert one item into another	Einsetzen, oder einpressen eines Teils in ein anderes	はめ込む/押し込む	箭头组装线/请依指示穿入零件位置
	Length after assembly	Länge nach Zusammenbau	長さ	组装零件长度
	Gap between two items	Spalt zwischen zwei Teilen	間隔	零件组装距离
	Follow arrow for direction of assembly	Folgen Sie dem Richtungspfeil beim Zusammenbau	組立ての方向に注意して下さい	请依照指式方向组装
① ② ③	Follow steps in this order	Reihenfolge beachten	順序に従ってください	请依标示顺序
	Gear grease	Getriebefett	ギアグリス	润滑油
	Silicone Grease	Silikon	デファレンシャルグリス	差速油
	Thread Lock	Schraubensicherungsmittel	ネジロック剤	螺丝缺氧胶
NOTE	Pay special attention	Besondere Bedeutung	特に注意してください	请小心处理
NOT INC	Not Included in this kit	Nicht im Baukasten enthalten	このキットには含まれておりません	本产品不包含此项零件
TAPE	Use double-sided tape to secure	Mit doppelseitigem Klebeband befestigen	両面テープで固定してください	请用双面胶固定

Required items (not included in kit)

Servo

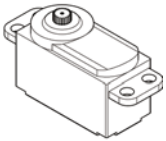

Motor

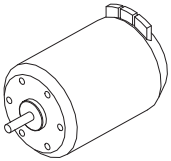

Controller

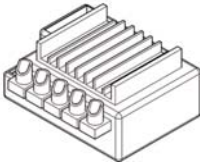

Receiver

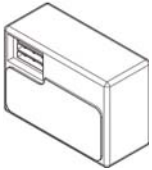

2S LiPO battery

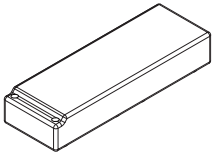

Battery Charger

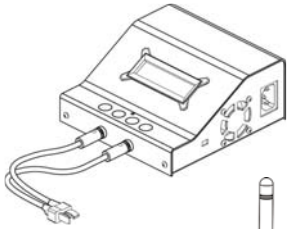

AA Battery

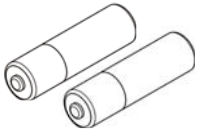

Transmitter

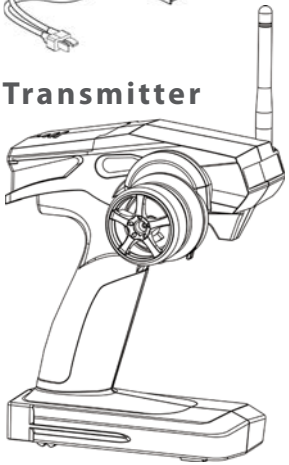

64dp Pinion

Diff and Shock Oil

Inserts

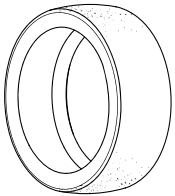

Tyres

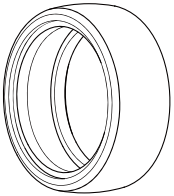

Double-sided Tape

CA glue

Needlenose Pliers

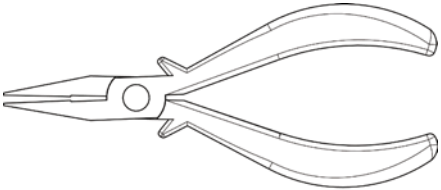

Cross Wrench

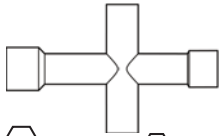

M4mm M3mm

Hex Driver

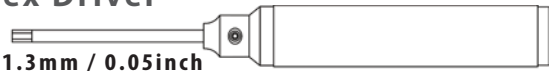

- 1.3mm / 0.05inch
- 1.5mm
- 2mm
- 2.5mm

Assembly Instructions

A1

DEX210 V2

A

1:1

CS M3x6mm
704004x2

CS M3x8mm
704006x8

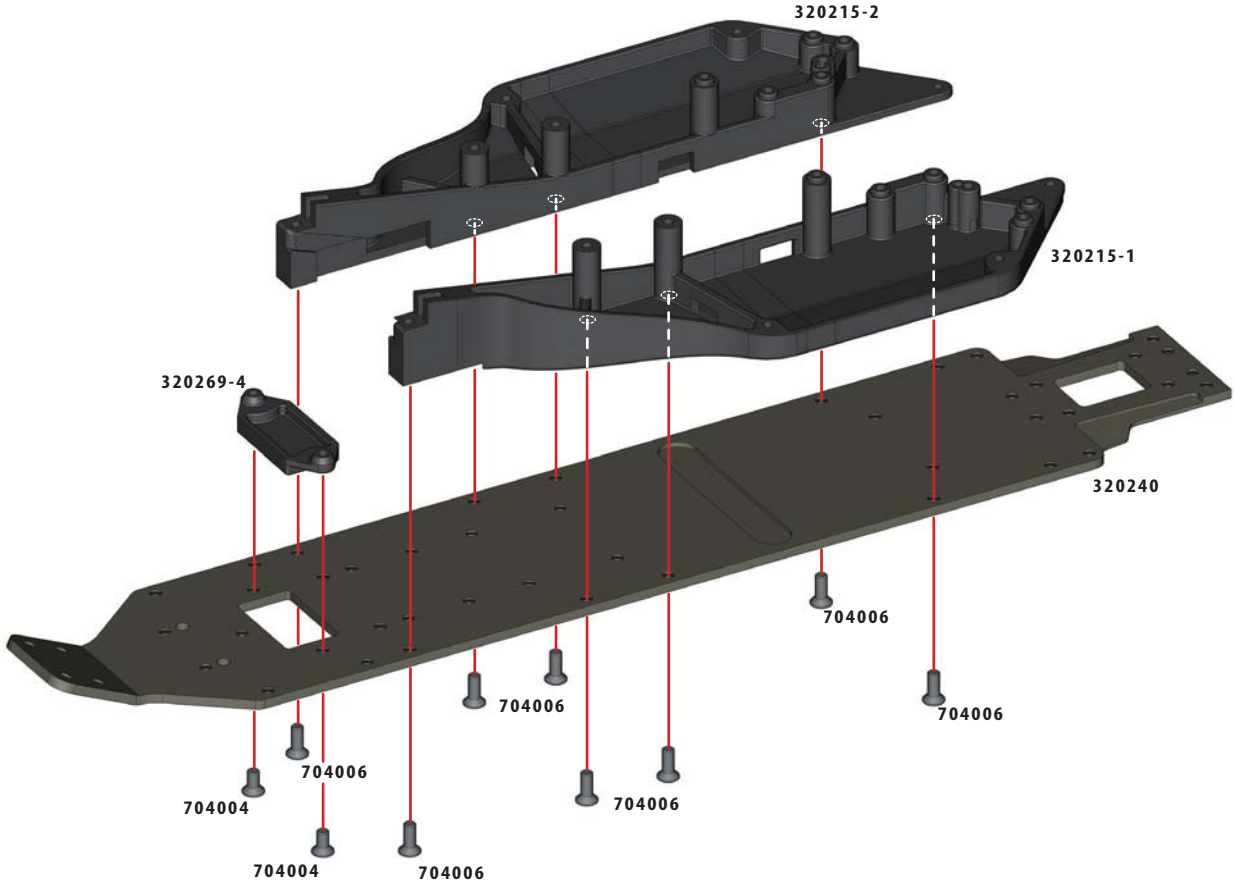

A2

1:1

BH M3x8mm
705002x2

SHIM 3x5x0.1mm
709018x4

Shim 3x6x0.5mm
709032x2

BB 3x7x3mm
601023x4

STOP NUT: M3 LOW
715001x2

PIVOT BALL C-TYPE
330602x3

CS M3x18mm
704001x2

STEERING KNUCKLE BUSHING
340004x2

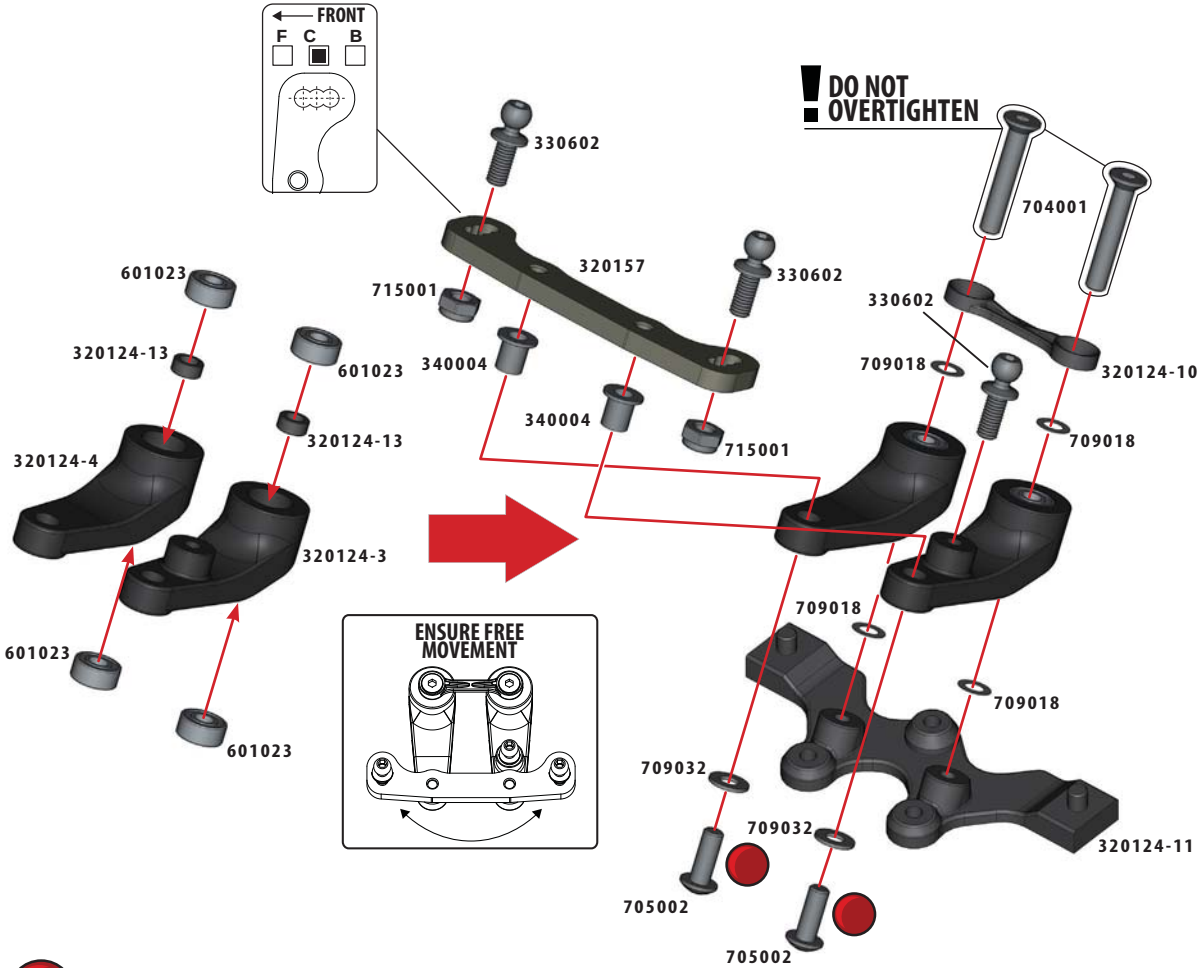

Thread Lock

A3

1:1

CS M3x6mm
704004x3

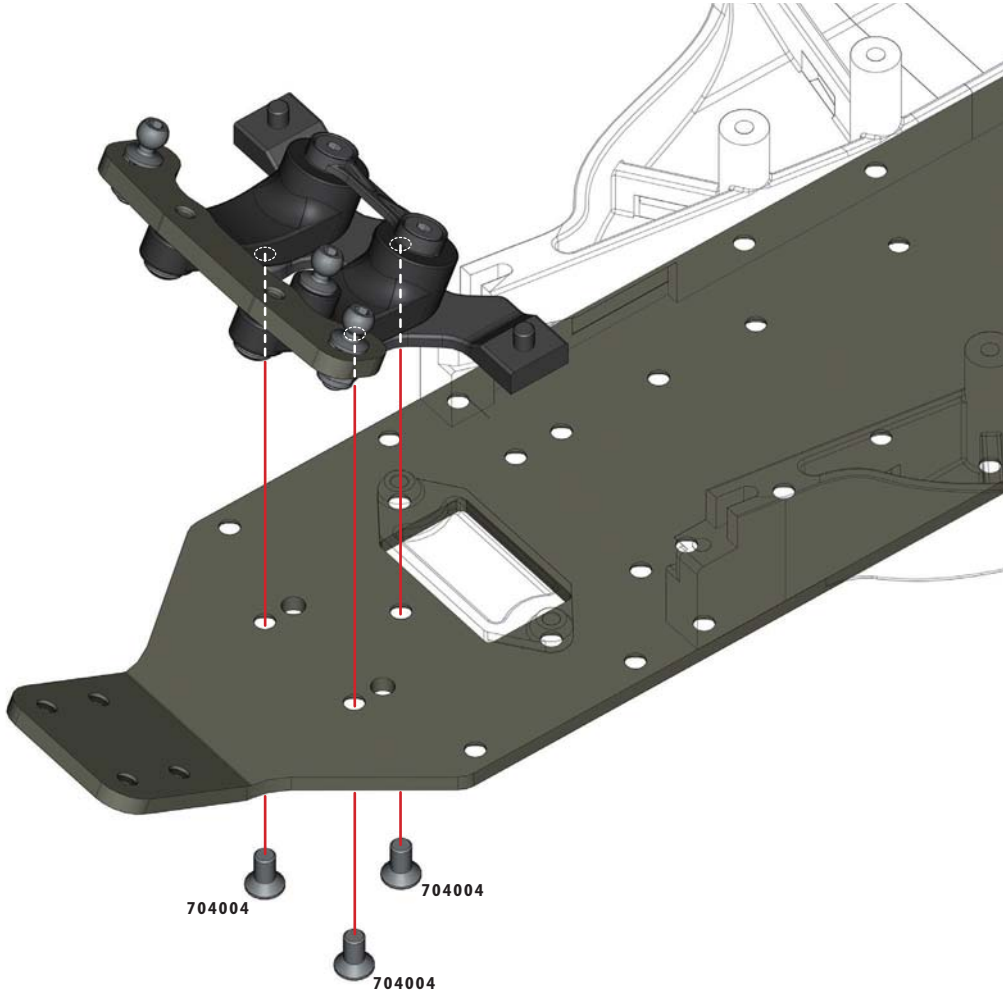

A4

1:1

BH M3x6mm
705001x1

BH M3x8mm
705002x5

Shim 3x6x0.5mm
709032x4

SETSCREW
M3x12mm
701007x1

PIVOT BALL A-TYPE
330033x1

320124-7
"23-Sanwa / KO / JR"

320124-8
"24-Hitec"

320124-9
"25-Futaba"

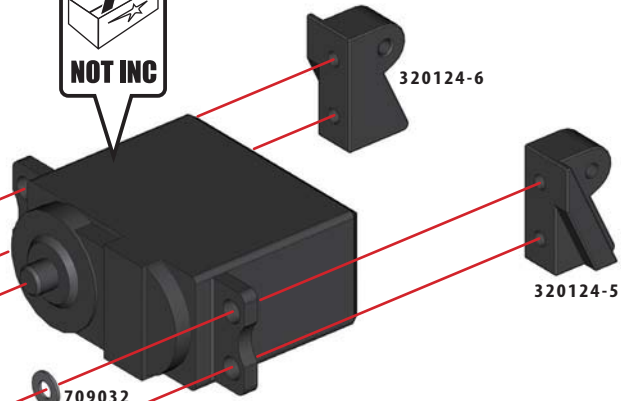

Use the screw that comes with your servo or:

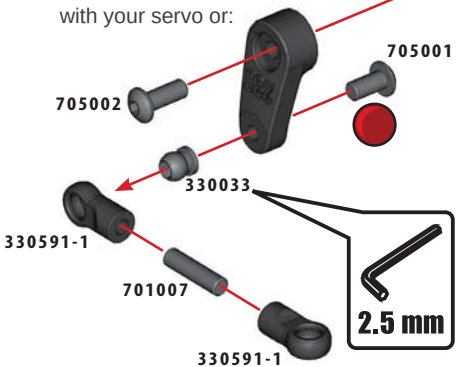

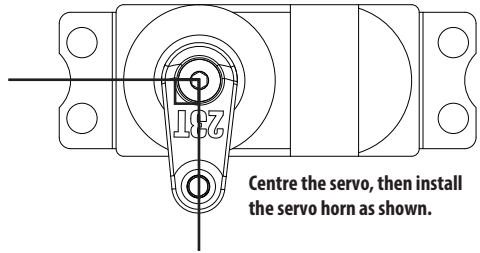

Centre the servo, then install the servo horn as shown.

Assemble the drag link as shown.

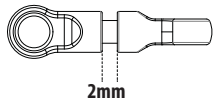

Thread Lock

A5

1:1

CS M3x10mm
704007x6

BH M3x14mm
705011x2

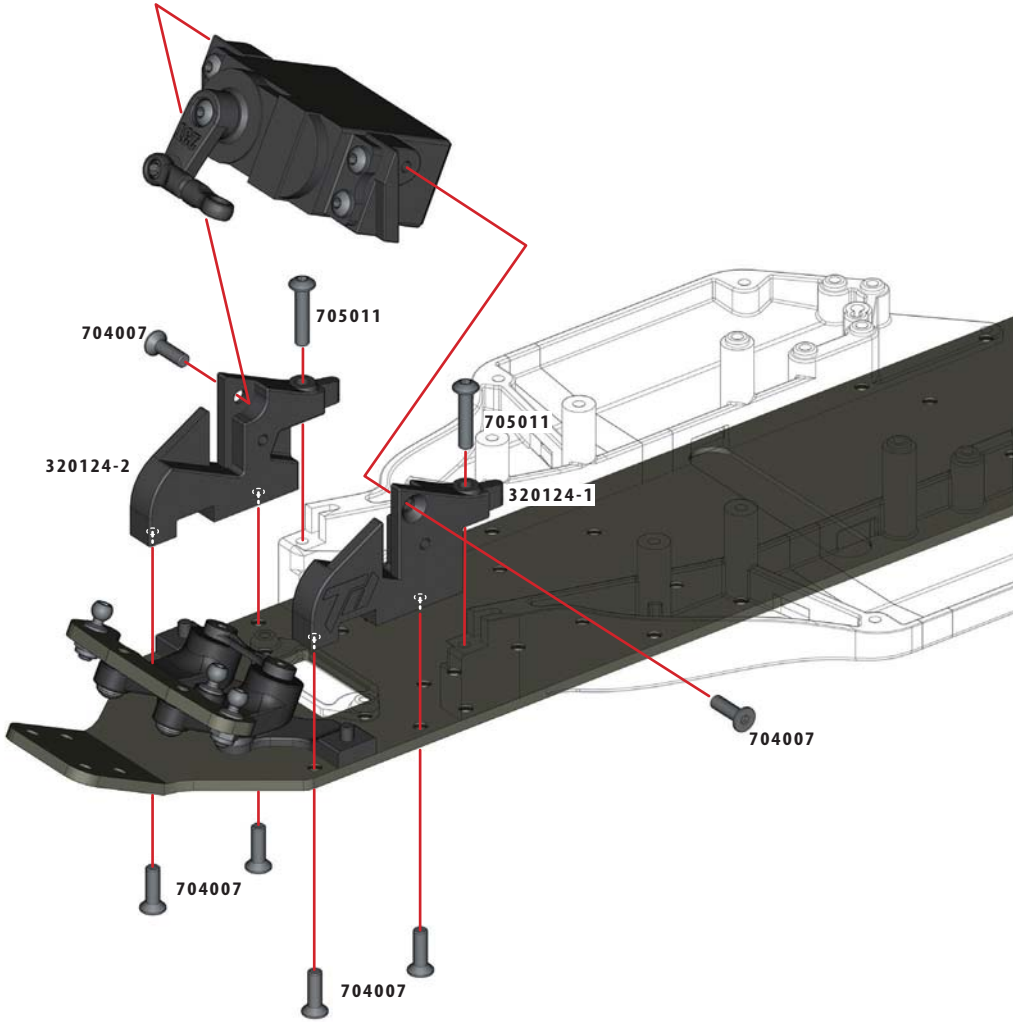

B1

DEX210 V2

B

1:1

CS M3x12mm
704003x2

CS M3x14mm
704005x4

CS M3x18mm
704001x4

Pivot Ball C-Type
10mm Long
330601x2

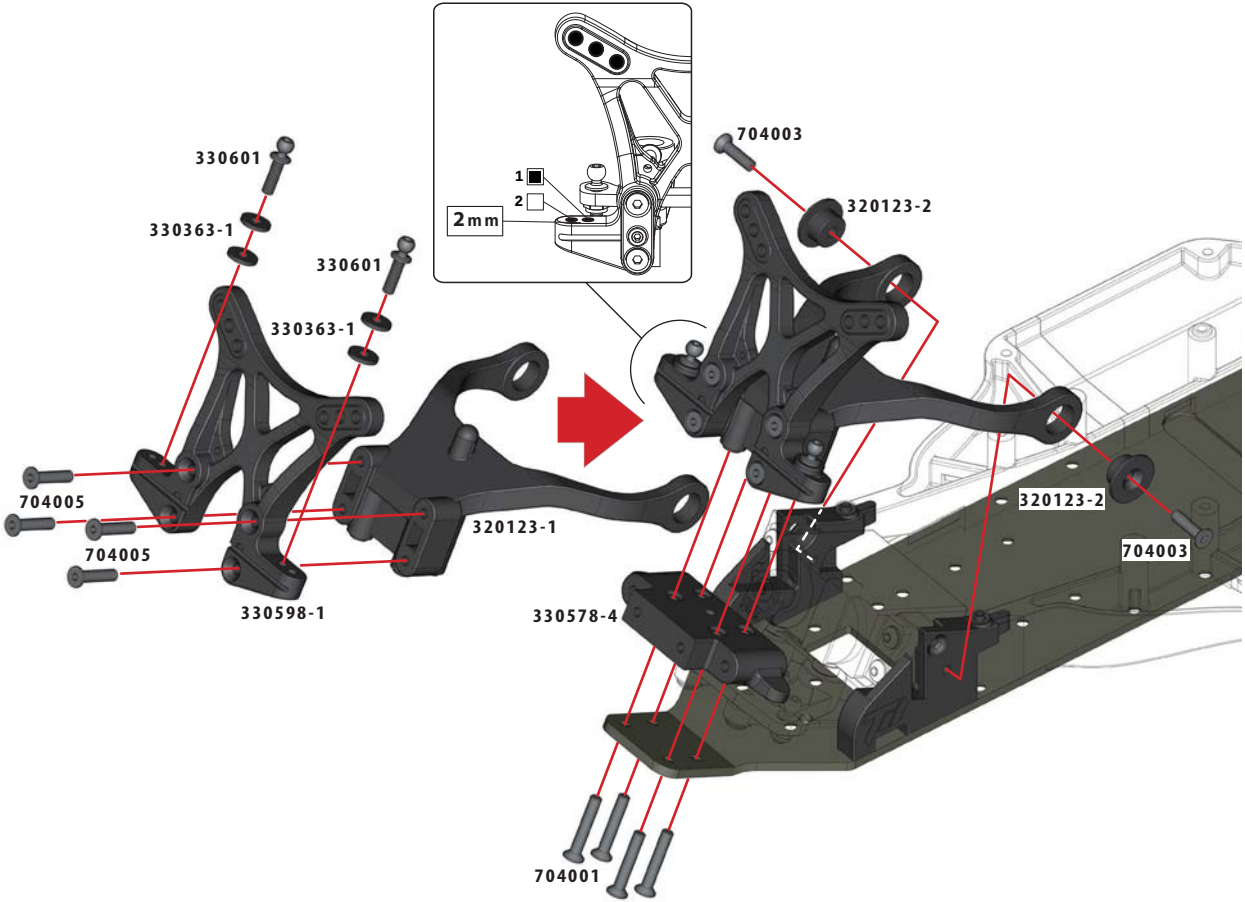

B2

1:1

BH M3x10mm
705005x2

SETSCREW
M4x8mm
701010x2

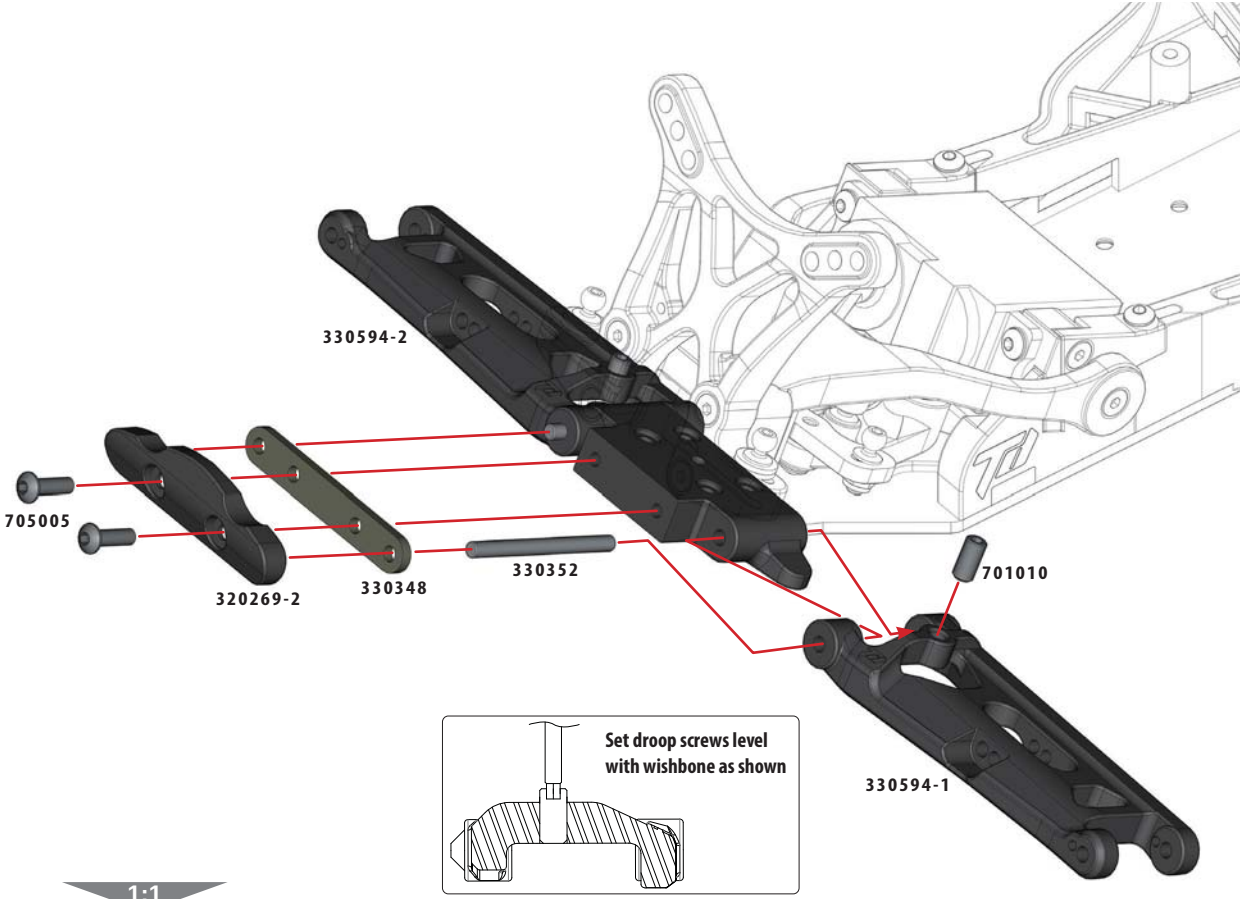

1:1

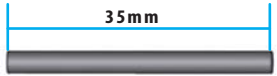

330352

1:1

BH M3x10mm
705005x2

BH M3x12mm
705004x4

STOP NUT: M3 LOW
715001x4

Shim 3x6x0.5mm
709032x2

STEERING KNUCKLE
BUSHING
340004x4

Pivot Ball C-Type
10mm Long
330601x4

NOTE

L R

Front Hubs

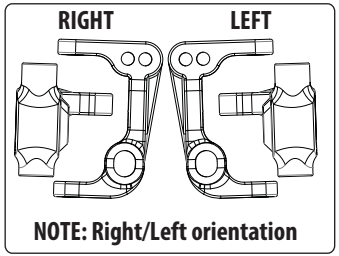

Left

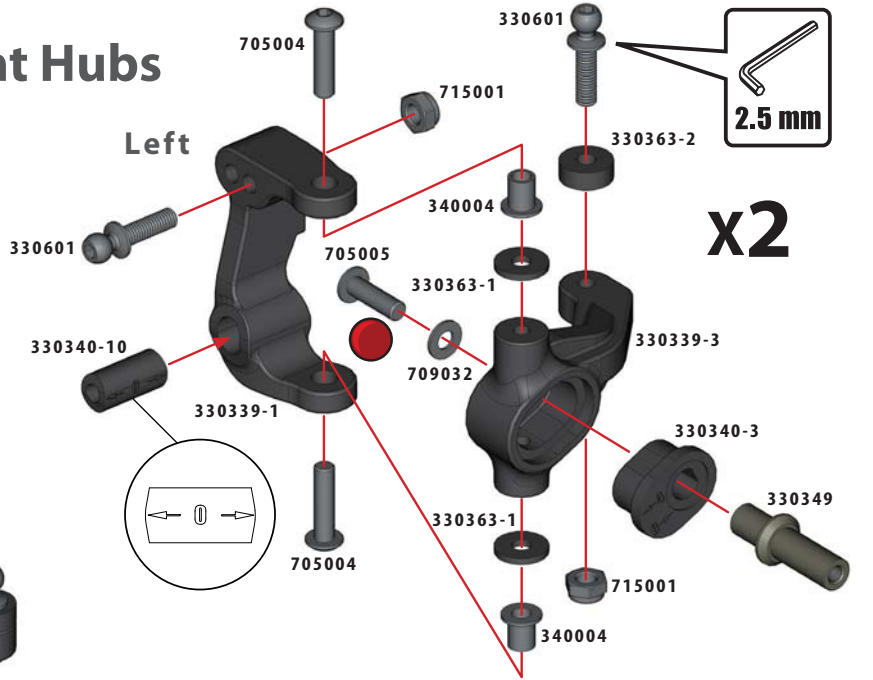

Right

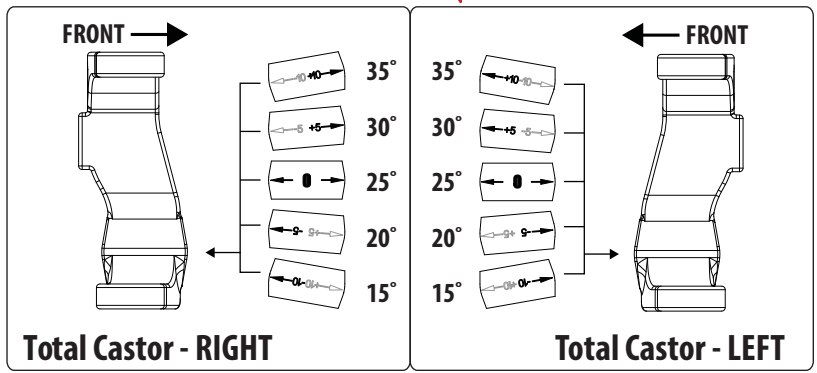

Thread Lock

B4

1:1

BH M2.5x4mm
705029x4

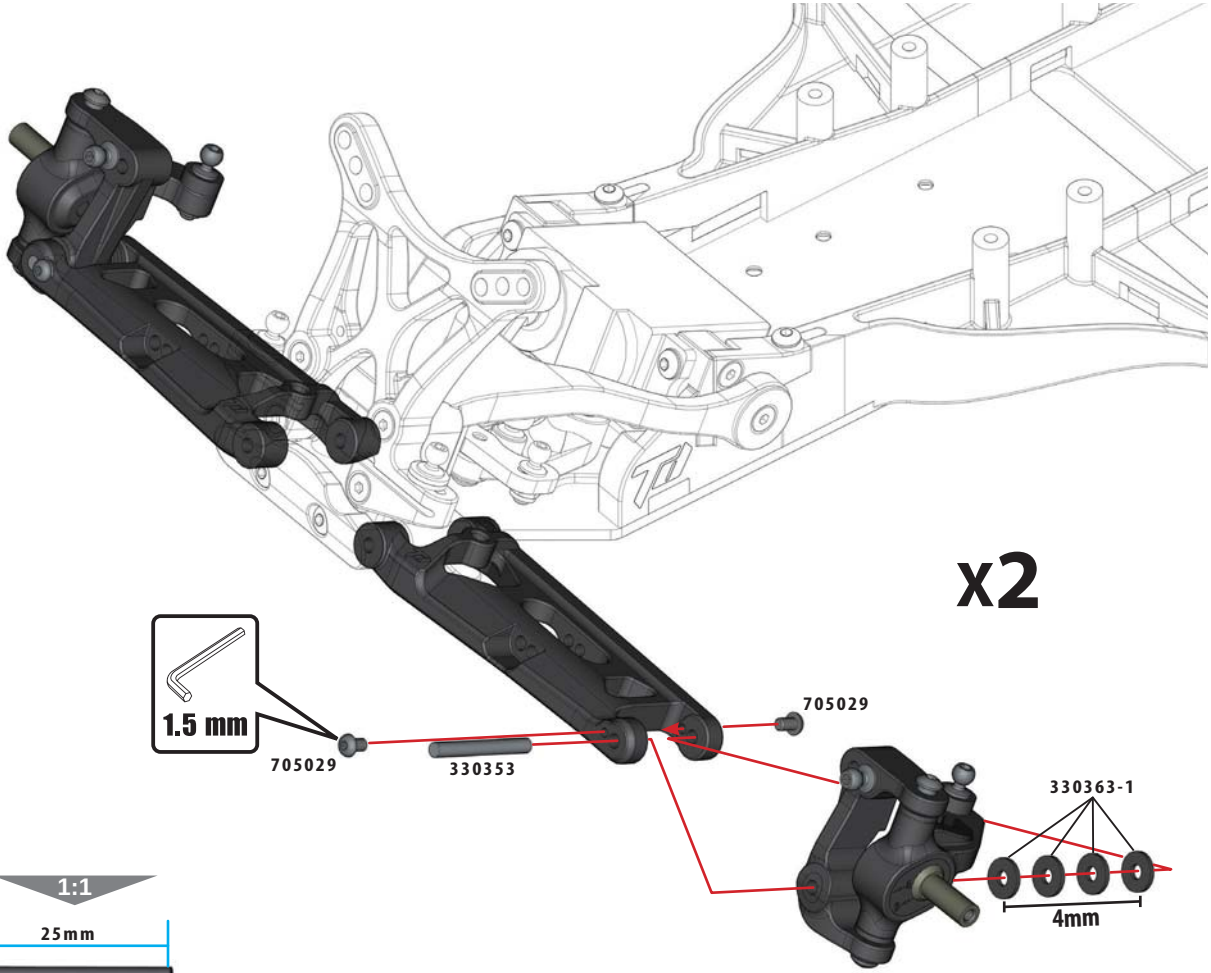

1:1

330353

C1

DEX210 V2

C

1:1

DRIVESHAFT PIN
A-TYPE 2.0mm
310123x2

ROLL PIN
1.6x14mm
310135x2

BB M5x13x4mm
601017x2

BB 10x15x4mm
601003x2

DRIVESHAFT
BUSHING (2.0mm)
310113x2

PIVOT BALL C-TYPE
330602x2

Shim5x7x0.2mm
709015x4

NOTE

L R

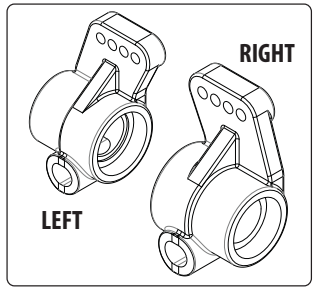

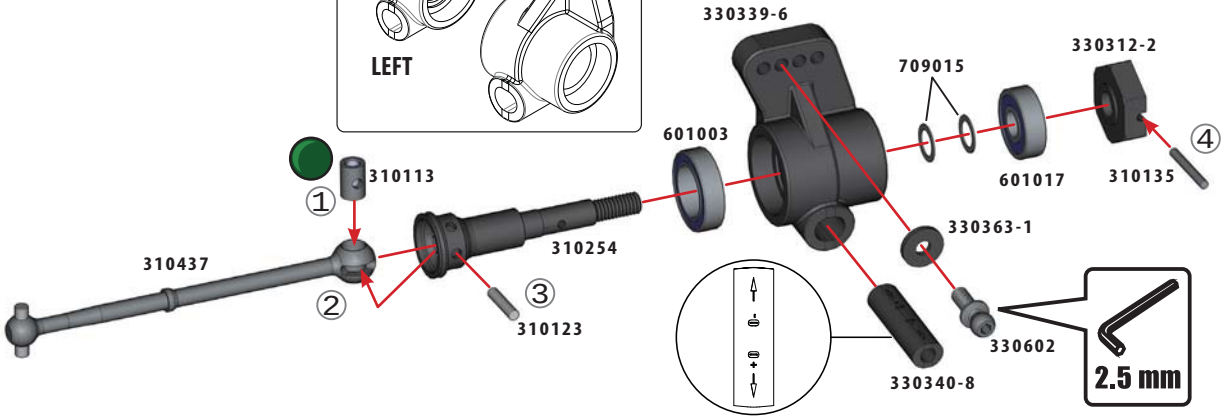

x2

Gear Grease

TOE-IN INSERT SYSTEM

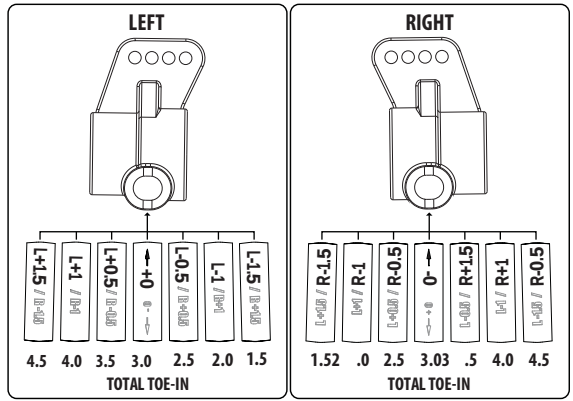

Pay close attention to orientation of inserts
to correctly set optional toe-in.

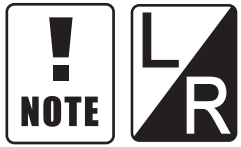

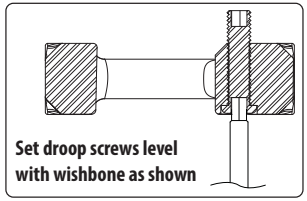

x2

Right

330712-2

701001

705029

330363-1

2mm

330363-1

2mm

330351

705029

1.5 mm

Rear

Left

330712-1

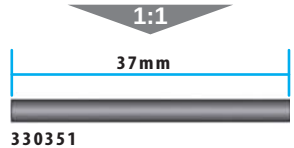

C3

1:1

CS M3x10mm
704007x2

CS M3x8mm
704006x2

PIVOT-BALL A-ARM
330037x2

Shim 3x6x0.5mm
709032x2

330578-1

709032

330363-1

330350

330599

330037

704007

704006

704006

704007

Thread Lock

1:1

41mm

330350

D1

DEX210 V2

D

1:1

SHIM 5x7x0.2
709015x1

SHIM
10x12x0.1mm
310033x4

BB 5x8x2.5mm
601020x2

F3-8 Caged Thrust Race
603005x1

BB 10x15x4mm
601003x2

3mm Ball
603003x14

Circlip 8x0.8mm
710002x1

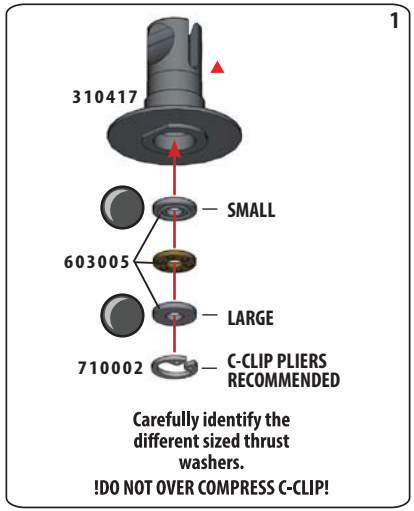

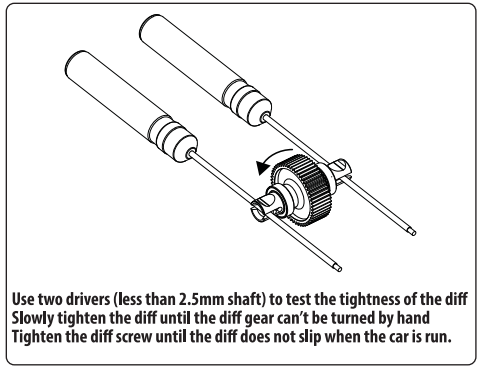

For further information please refer to the Team Durango online build guide:

Black Grease

Silicone Grease

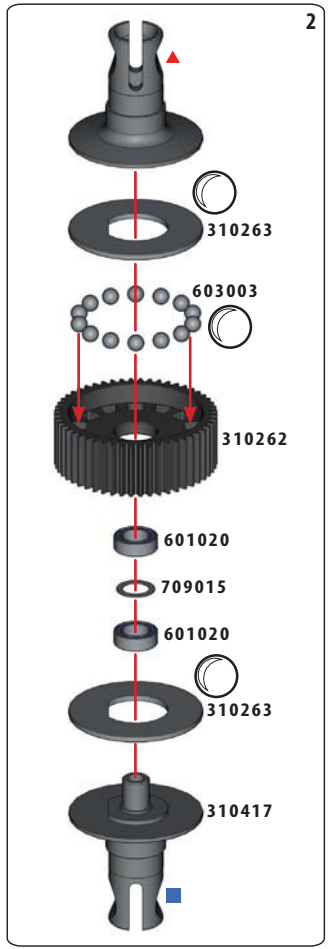

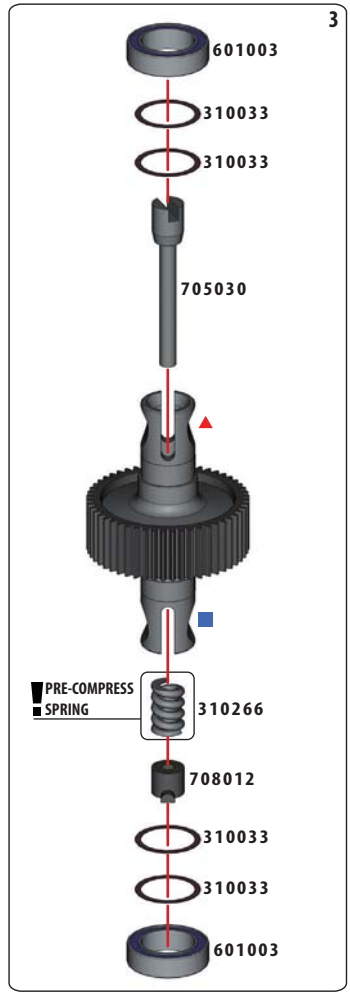

RM REAR MOTOR

For rear motor follow steps on left side pages

MM MID MOTOR

For mid motor follow steps on right side pages

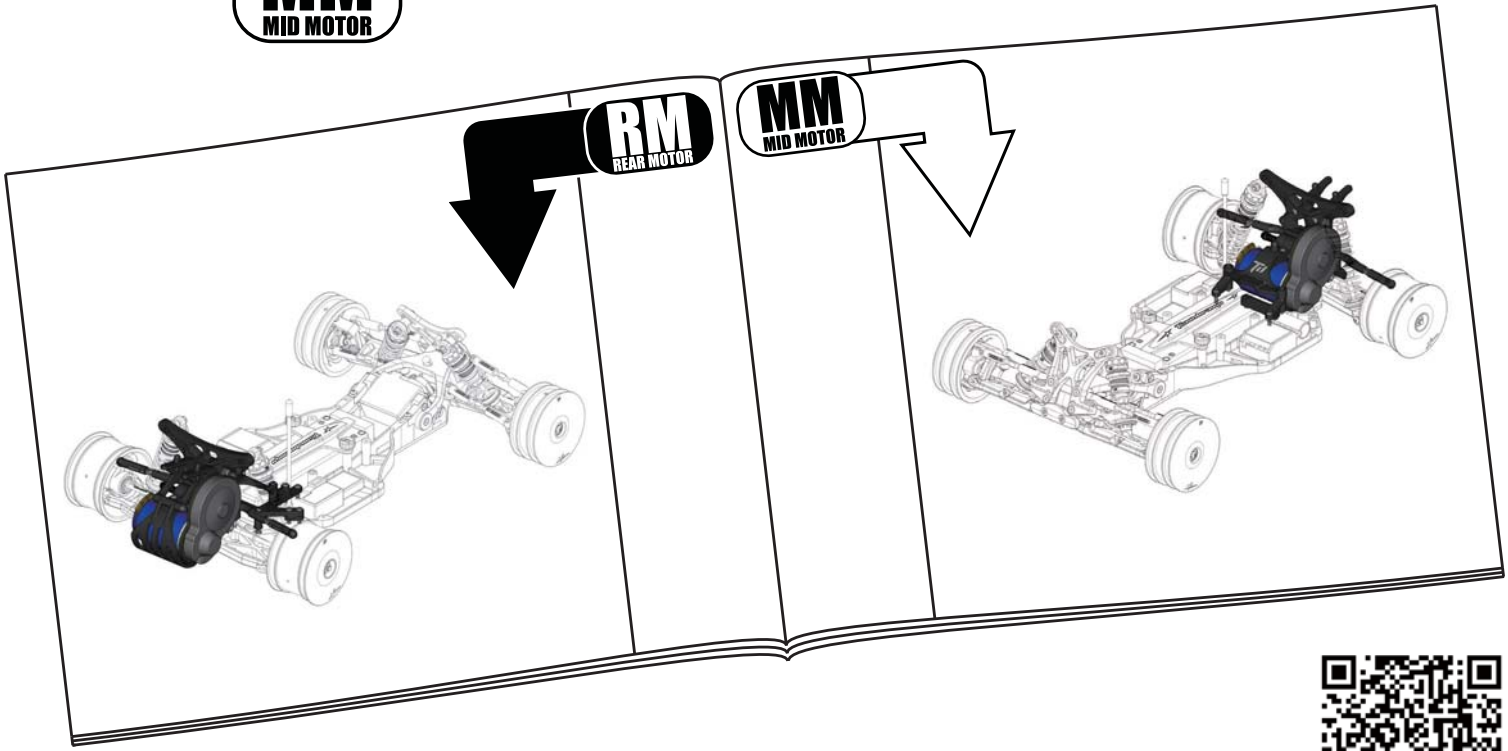

www.team-durango.com/dex210-motor-config

E1 RM REAR MOTOR

DEX210 V2

E

1:1

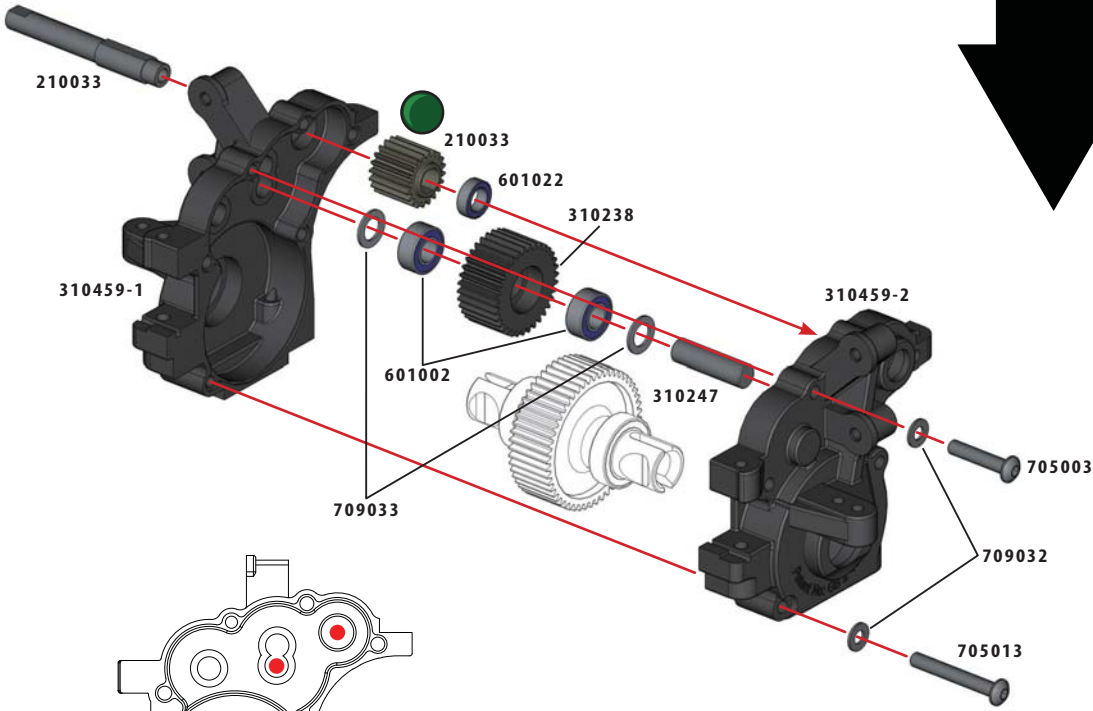

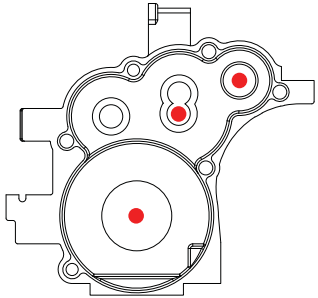

3 Gear Rear Motor (RM) Configuration.
Carefully use the layout shown above.

Gear Grease

20t Layshaft Gear
210033x1

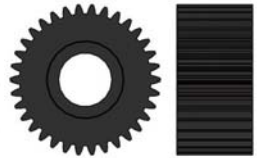

34T Idler Gear
310238x1

BH M3x22mm
705013x1

BH M3x15mm
705003x1

Idler Gear Pin
310247x1

Shim 3x6x0.5mm
709032x2

Idler Gear Shim
5x8x0.5MM
709033x2

BB 5x8x2.5mm
601022x1

BB 5x10x4mm
601002x2

MM MID MOTOR E 1

DEX210 V2

E

1:1

BH M3x22mm
705013x1

BH M3x15mm
705003x1

Idler Gear Pin
310247x2

Shim 3x6x0.5mm
709032x2

Idler Gear Shim
5x8x0.5MM
709033x4

BB 5x8x2.5mm
601022x1

BB 5x10x4mm
601002x4

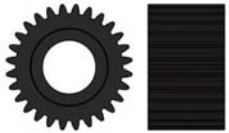

28T Idler Gear
310248x2

20t Layshaft Gear
210033x1

Gear Grease

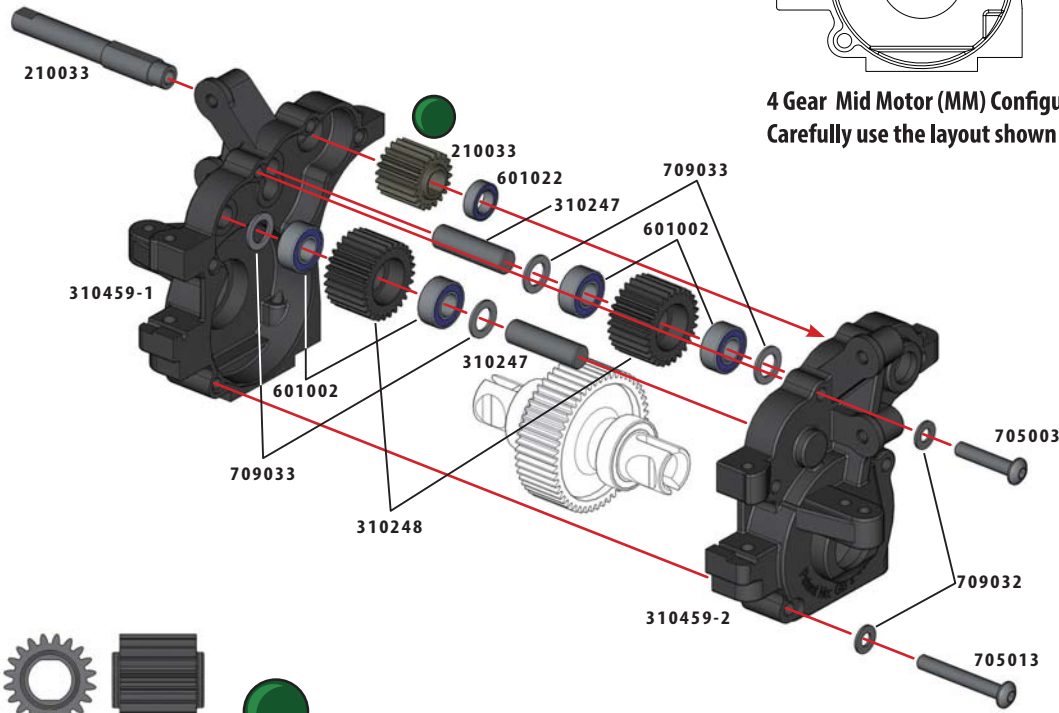

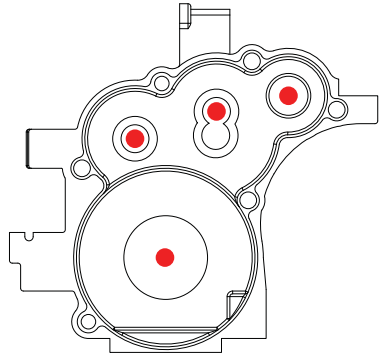

4 Gear Mid Motor (MM) Configuration.
Carefully use the layout shown above.

1:1

RM REAR MOTOR + MM MID MOTOR

Follow these steps for both RM and MM configurations

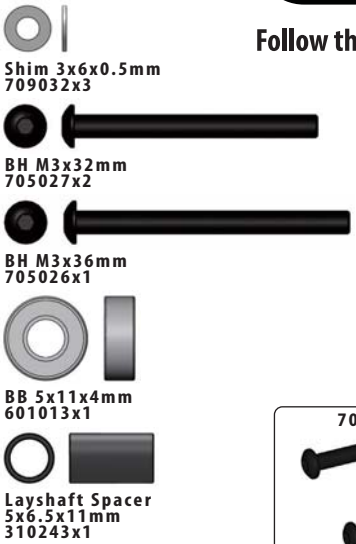

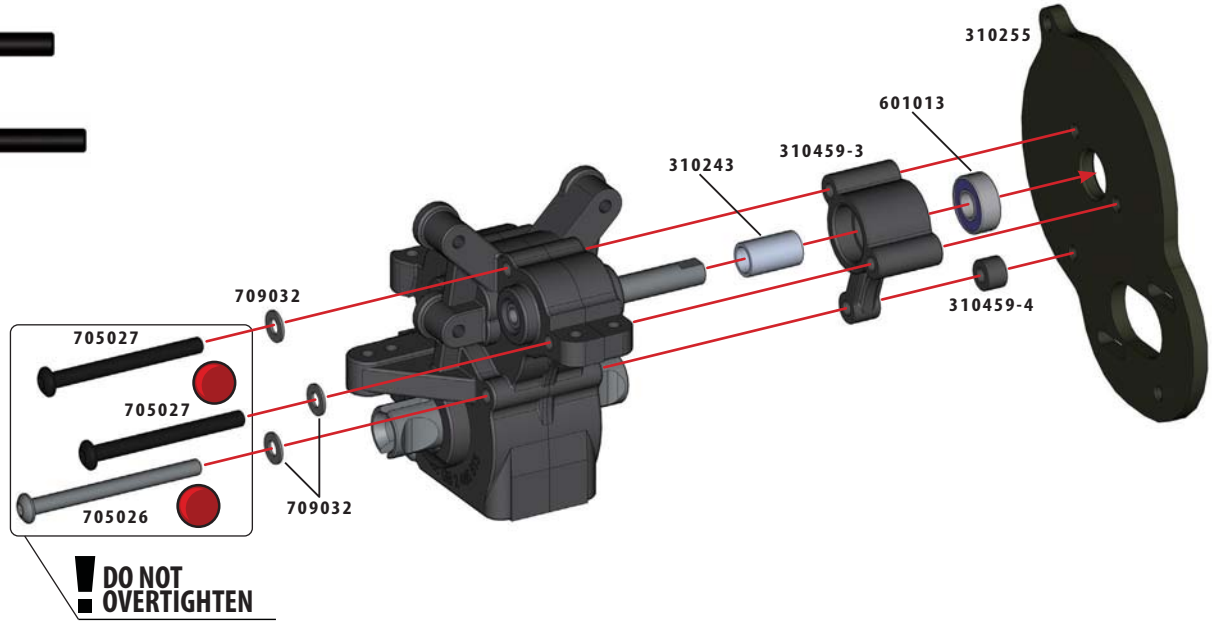

Thread Lock

1:1

SHIM 5x7x0.2mm
709015x2

Shim 3x6x0.5mm
709032x2

Pin 1.5 x 7mm
310239x1

STOP NUT:M3 HIGH
715002x1

RM REAR MOTOR + MM MID MOTOR

Follow these steps for both RM and MM configurations

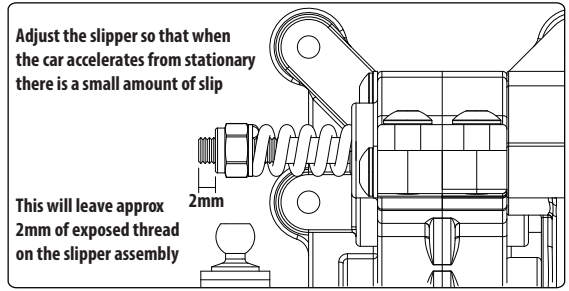

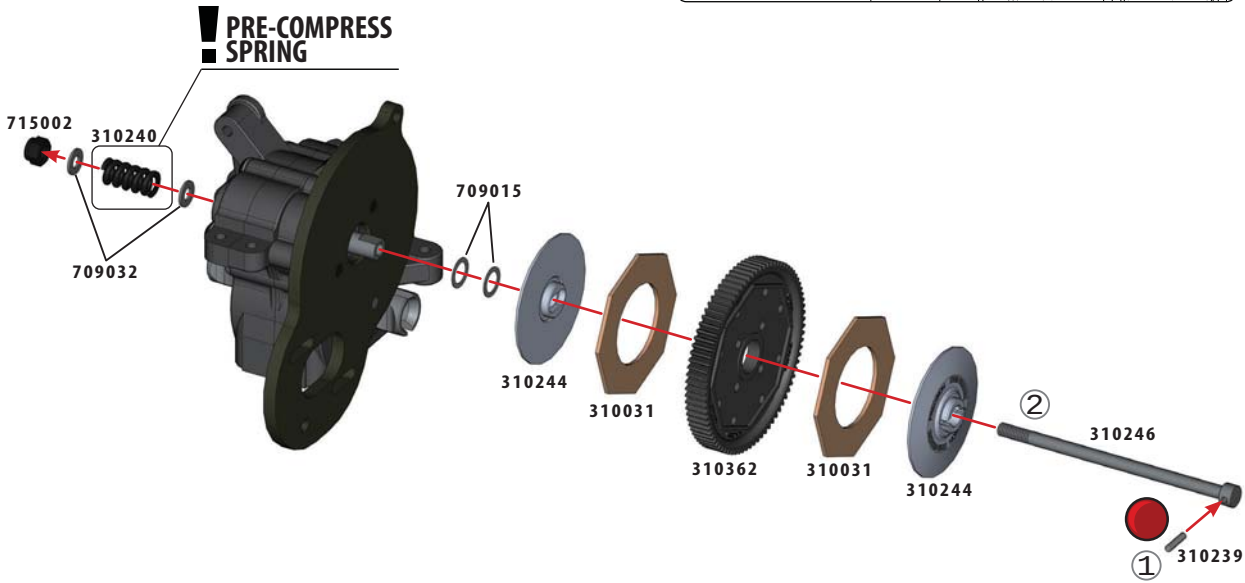

Thread Lock

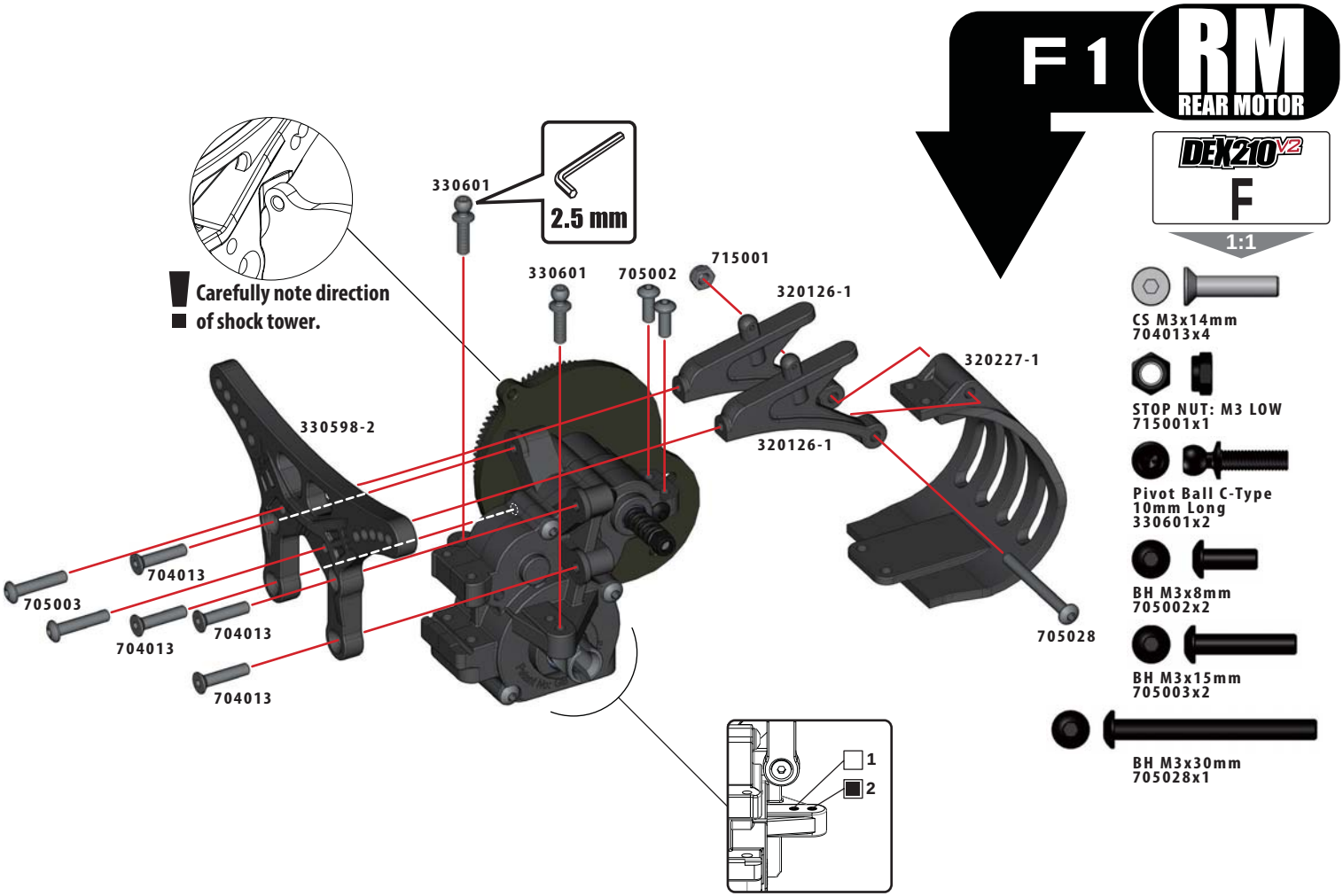
F1
RM
REAR MOTOR
DEX210 V2
F
1:1
330601
2.5 mm
Carefully note direction of shock tower.
330601
705002
715001
320126-1
320227-1
330598-2
320126-1
704013
705003
704013
704013
704013
705028
1
2
CS M3x14mm
704013x4
STOP NUT: M3 LOW
715001x1
Pivot Ball C-Type
10mm Long
330601x2
BH M3x8mm
705002x2
BH M3x15mm
705003x2
BH M3x30mm
705028x1

MM MID MOTOR F 1

DEX210 V2

F

1:1

BH M3x15mm
705003x2

BH M3x30mm
705028x1

CS M3x14mm
704013x4

STOP NUT: M3 LOW
715001x1

Pivot Ball C-Type
10mm Long
330601x2

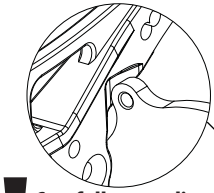

Carefully note direction of shock tower.

330601

330598-2

715001

705003

705003

330601

320126-2

704013

704013

320126-2

705028

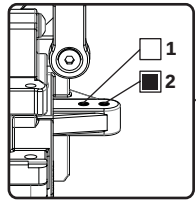

1:1

BH M3x10mm
705005x3

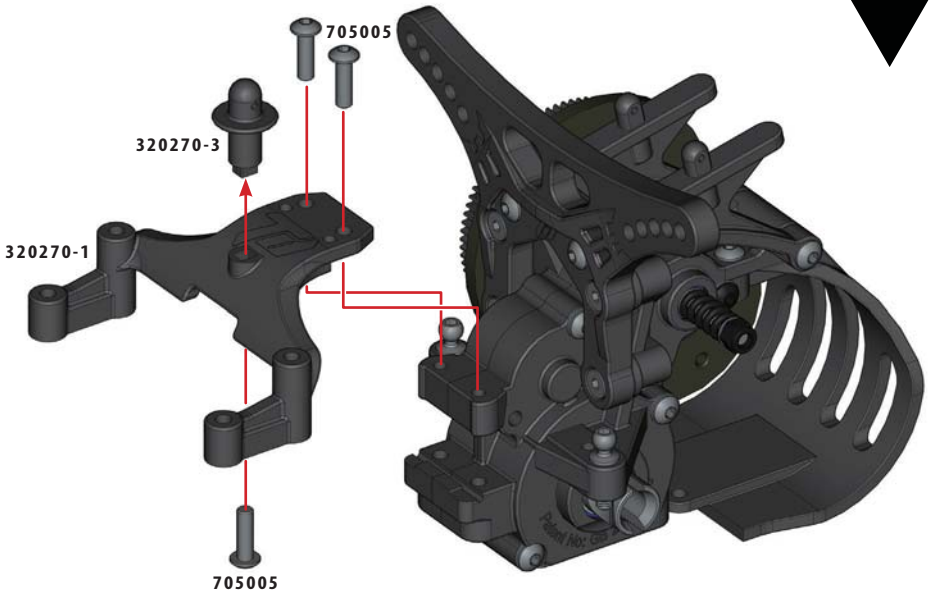

MM MID MOTOR F2

1:1

BH M3x8mm
705002x2

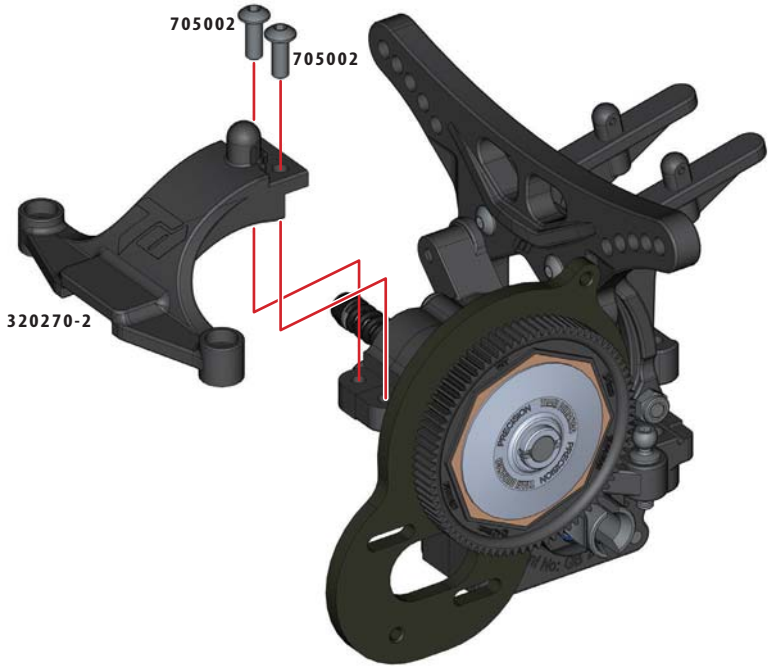

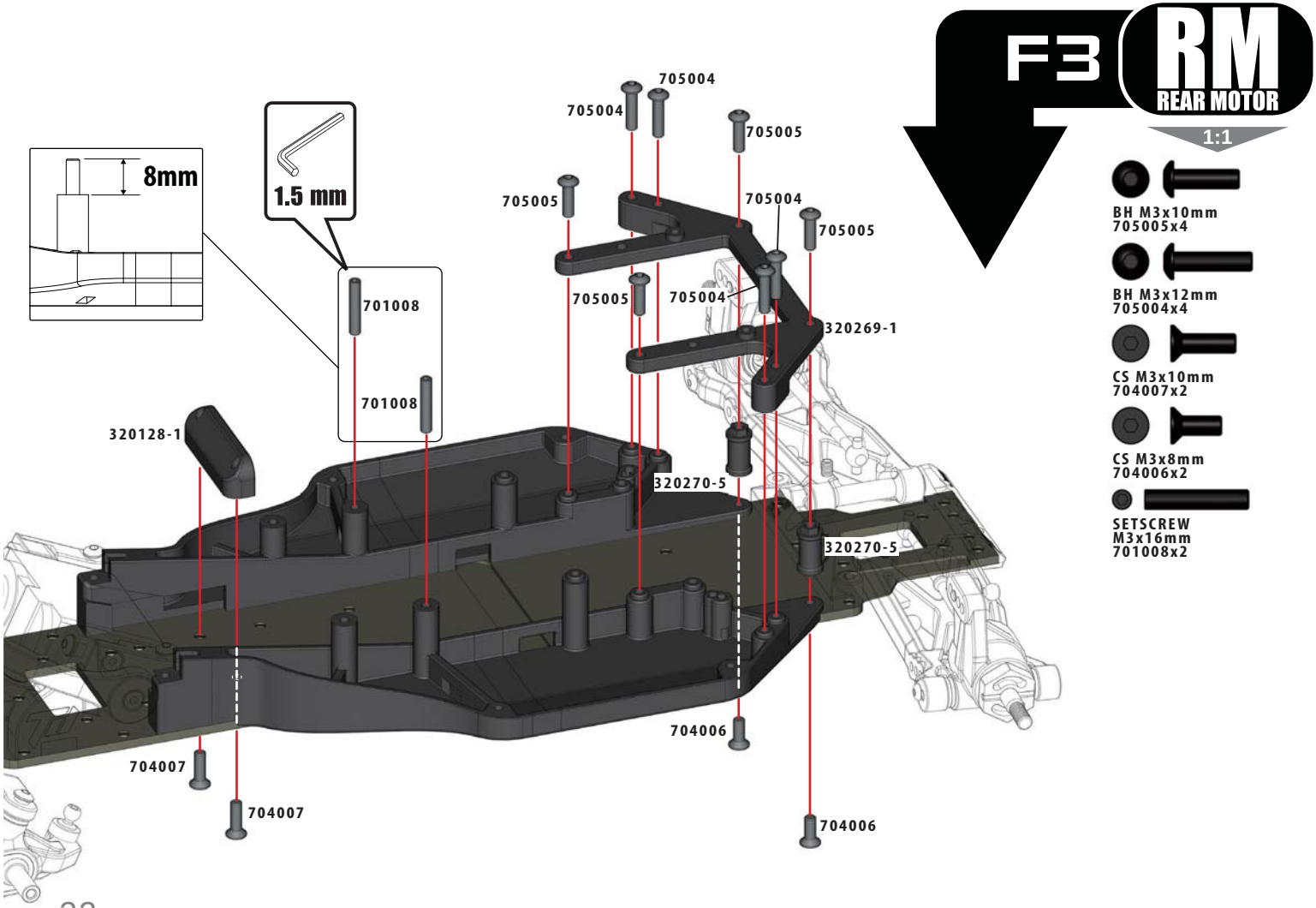
F3
RM
REAR MOTOR
1:1
8mm
1.5 mm
705004
705004
705005
705005
705004
705005
705005
705004
320269-1
701008
701008
320128-1
320270-5
320270-5
704006
704007
704007
704006
BH M3x10mm
705005x4
BH M3x12mm
705004x4
CS M3x10mm
704007x2
CS M3x8mm
704006x2
SETSCREW
M3x16mm
701008x2

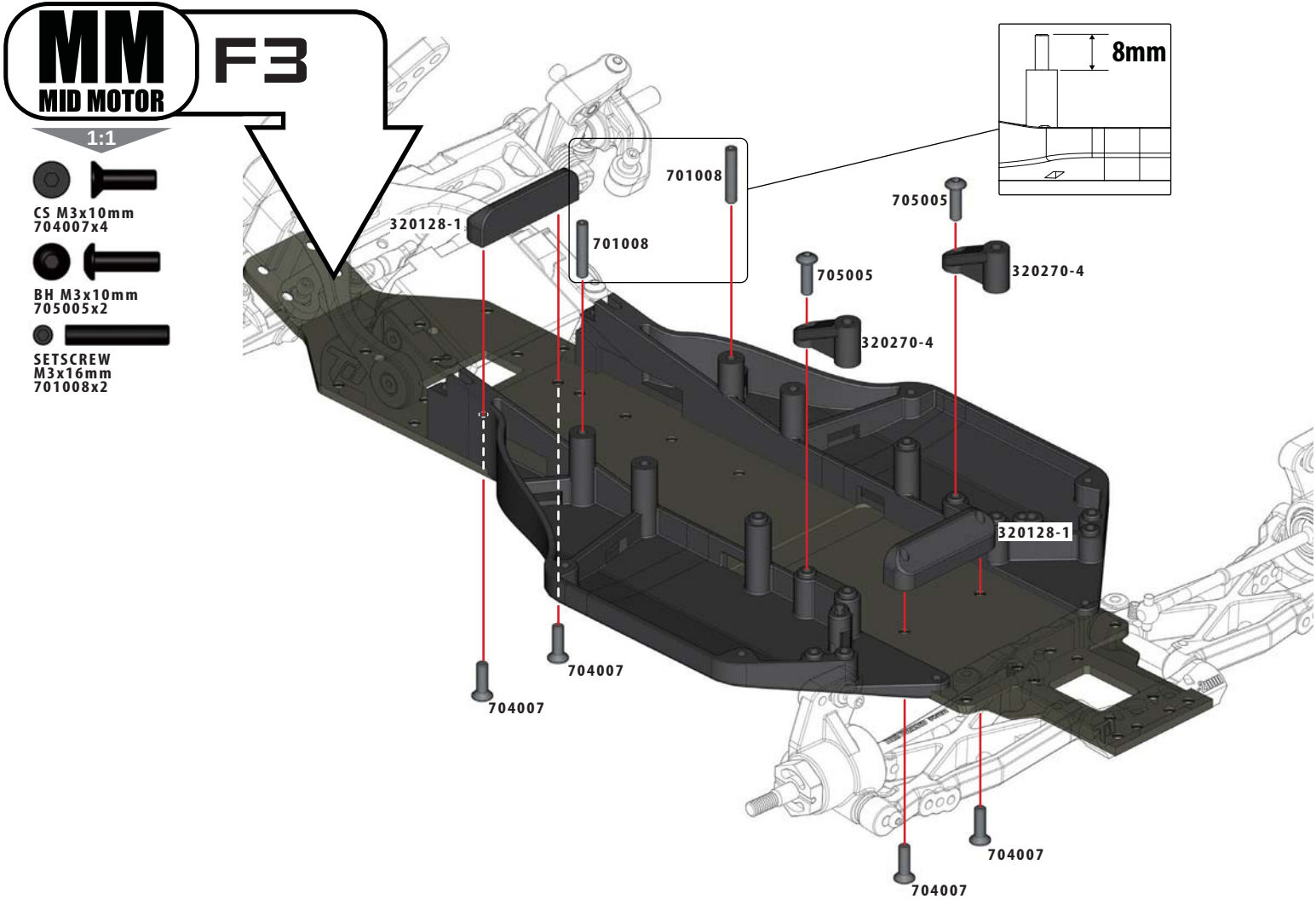
MM
MID MOTOR
F3
1:1
CS M3x10mm
704007x4
BH M3x10mm
705005x2
SETSCREW
M3x16mm
701008x2
8mm
701008
705005
320128-1
701008
705005
320270-4
320270-4
320128-1
704007
704007
704007
704007

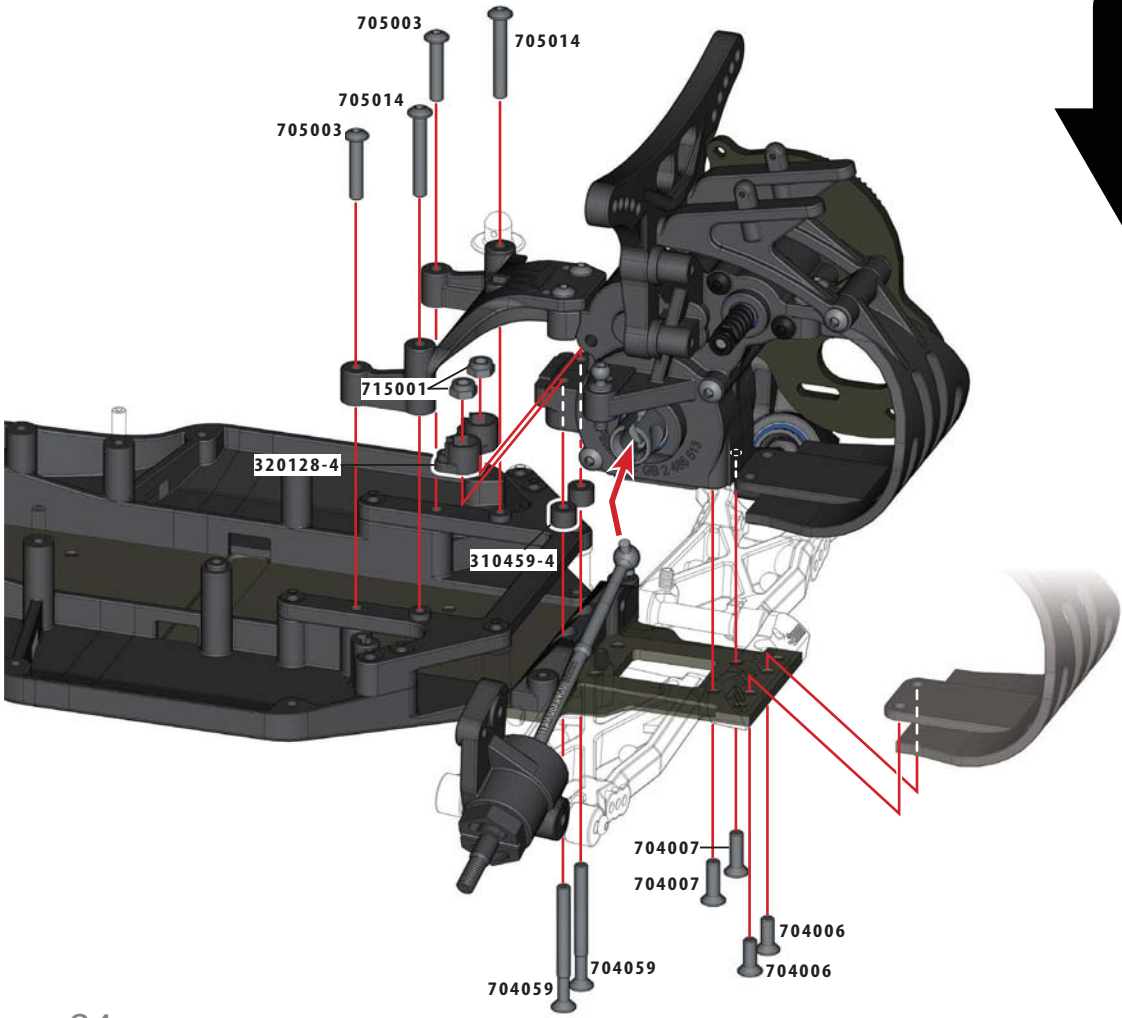

F4 RM REAR MOTOR

1:1

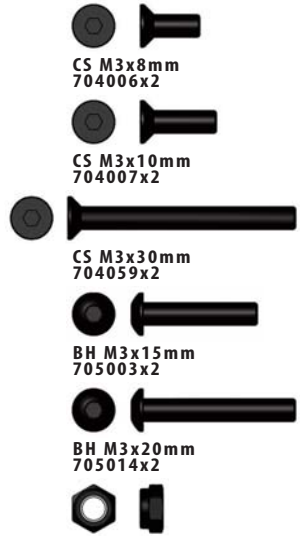

MM MID MOTOR F4

1:1

CS M3x10mm
704007x2

CS M3x30mm
704059x2

BH M3x20mm
705014x2

STOP NUT: M3 LOW
715001x2

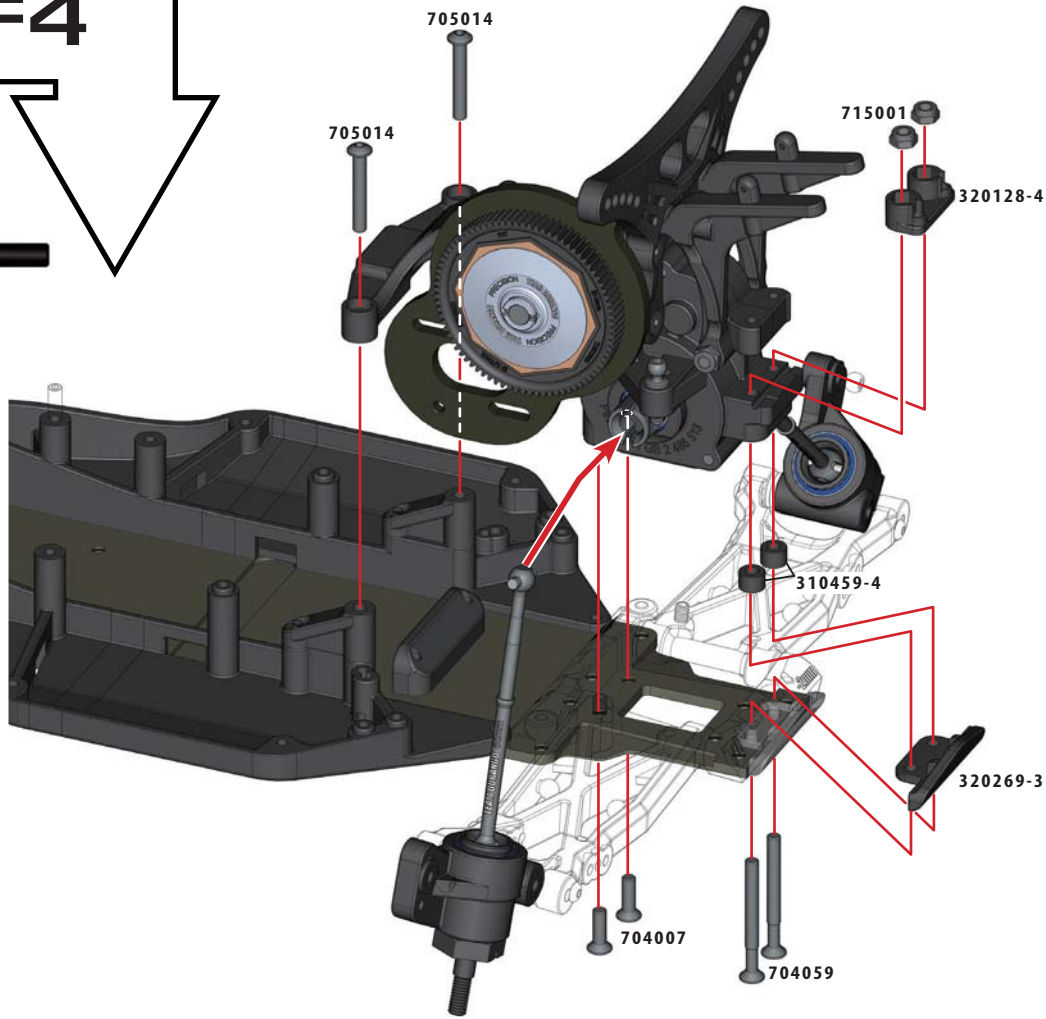

DEX210 V2

G

1:1

RM REAR MOTOR + MM MID MOTOR

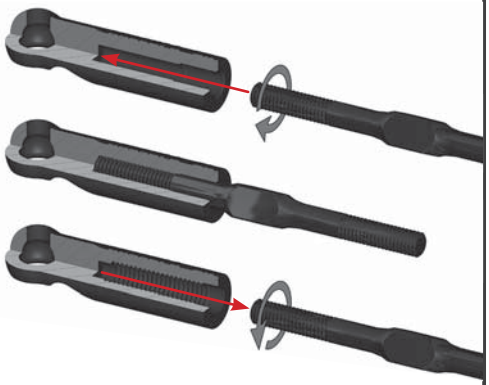

To achieve the optimum turnbuckle assembly, follow this step-by-step guide and you will build the perfect linkages. Prior to assembling your turnbuckle linkages, apply a small amount of silicone grease directly to the thread area of each turnbuckle linkage.

Step 1: Thread the ball cup onto the turnbuckle. Continue until all the turnbuckle linkage thread is inside the ball cup shaft.

Step 2: Unthread the ball cup from the turnbuckle completely. This will fully form the internal thread pattern inside your ball cup.

Step 3: Thread the ball cup onto the turnbuckle once again, and continue until you reach the specified length for front, steering and rear linkages.

Step 4: Attach your assembled turnbuckle linkages to your vehicle and make any final adjustments with the supplied turnbuckle wrench.

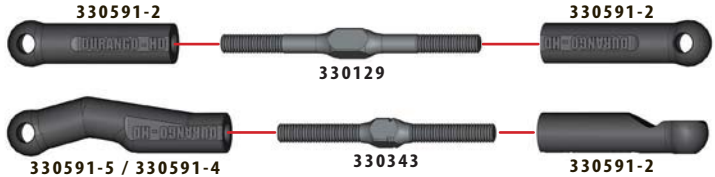

Front Left Camber Link

Front Right Camber Link

Steering Link (2 Pcs)

Rear Left Camber Link (MM)

Rear Right Camber Link (MM)

Rear Right Camber Link (RM)

Rear Left Camber Link (RM)

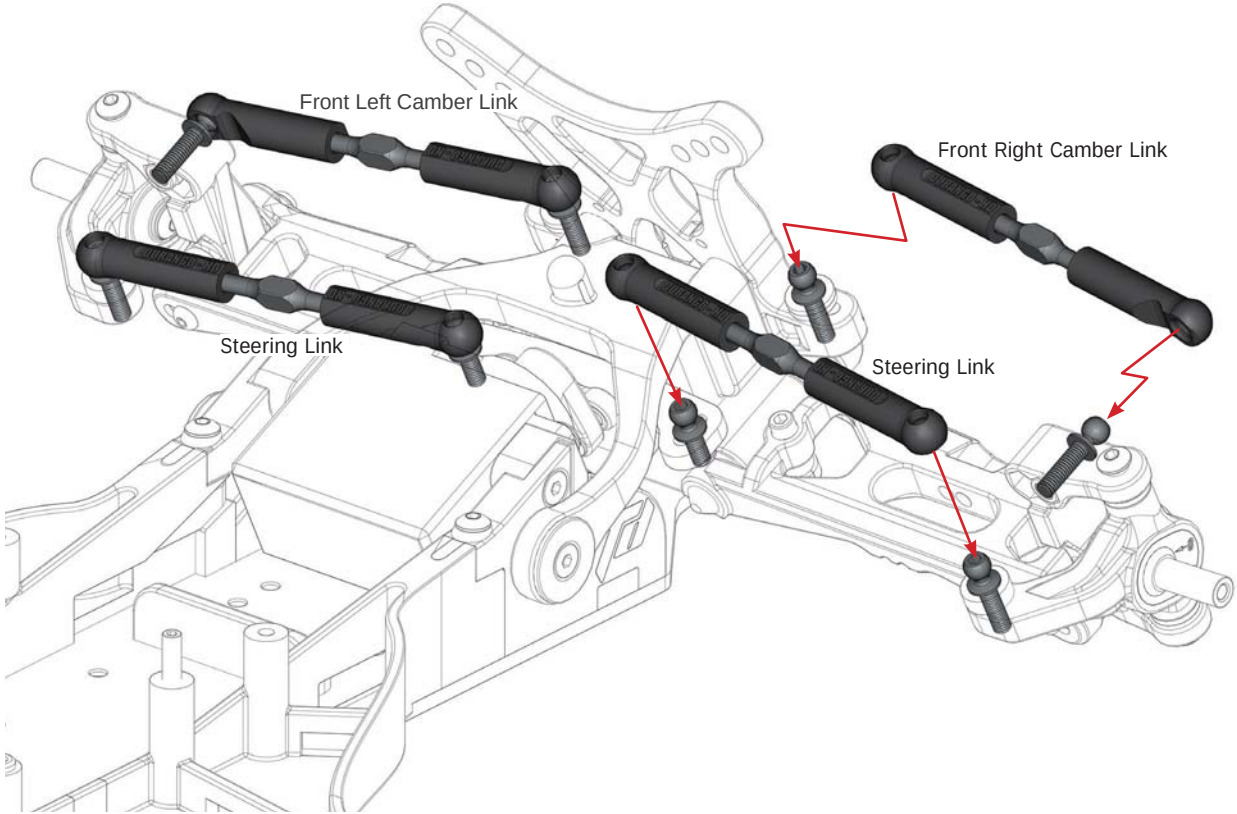
Front Left Camber Link
Front Right Camber Link
Steering Link
Steering Link

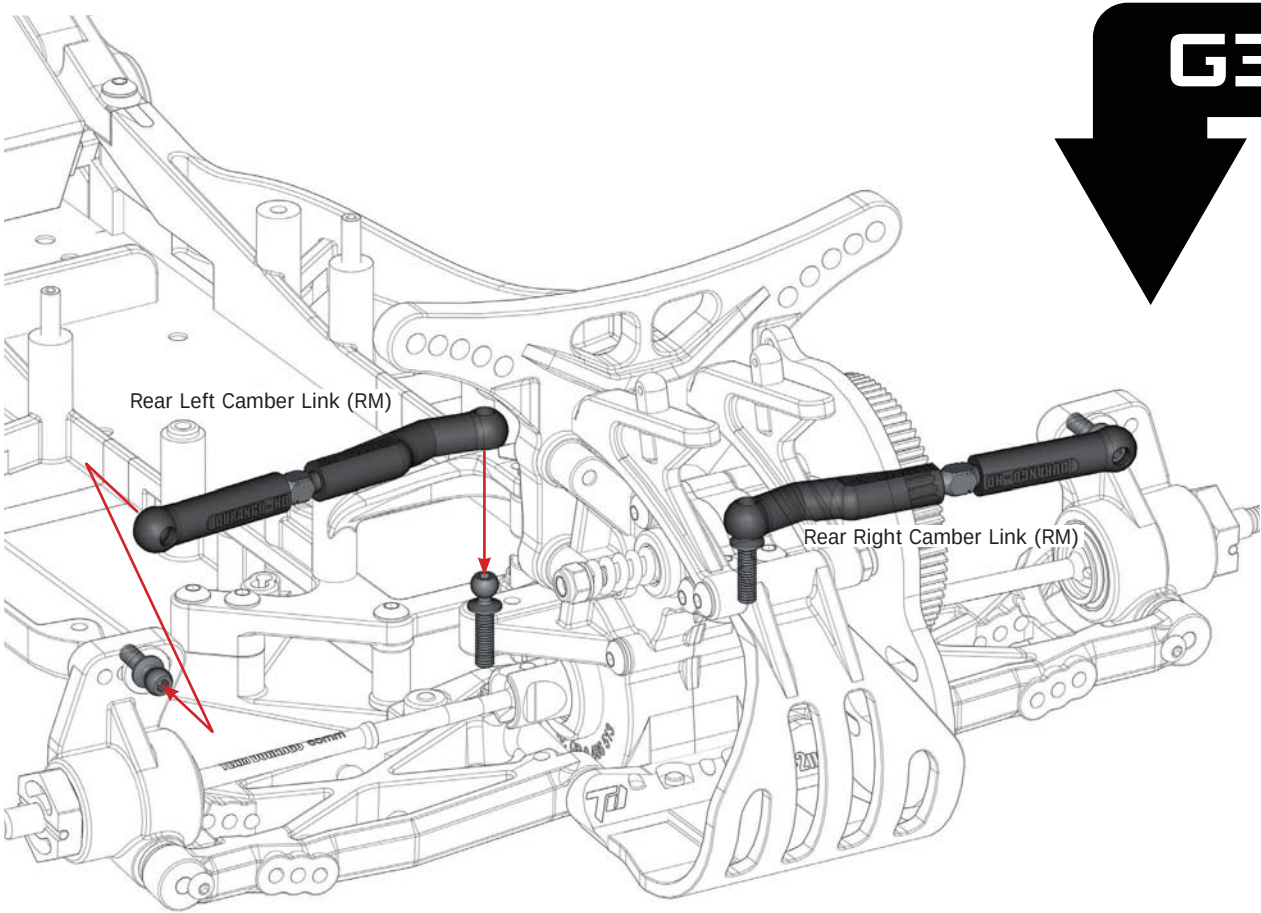

G3 RM REAR MOTOR

1:1

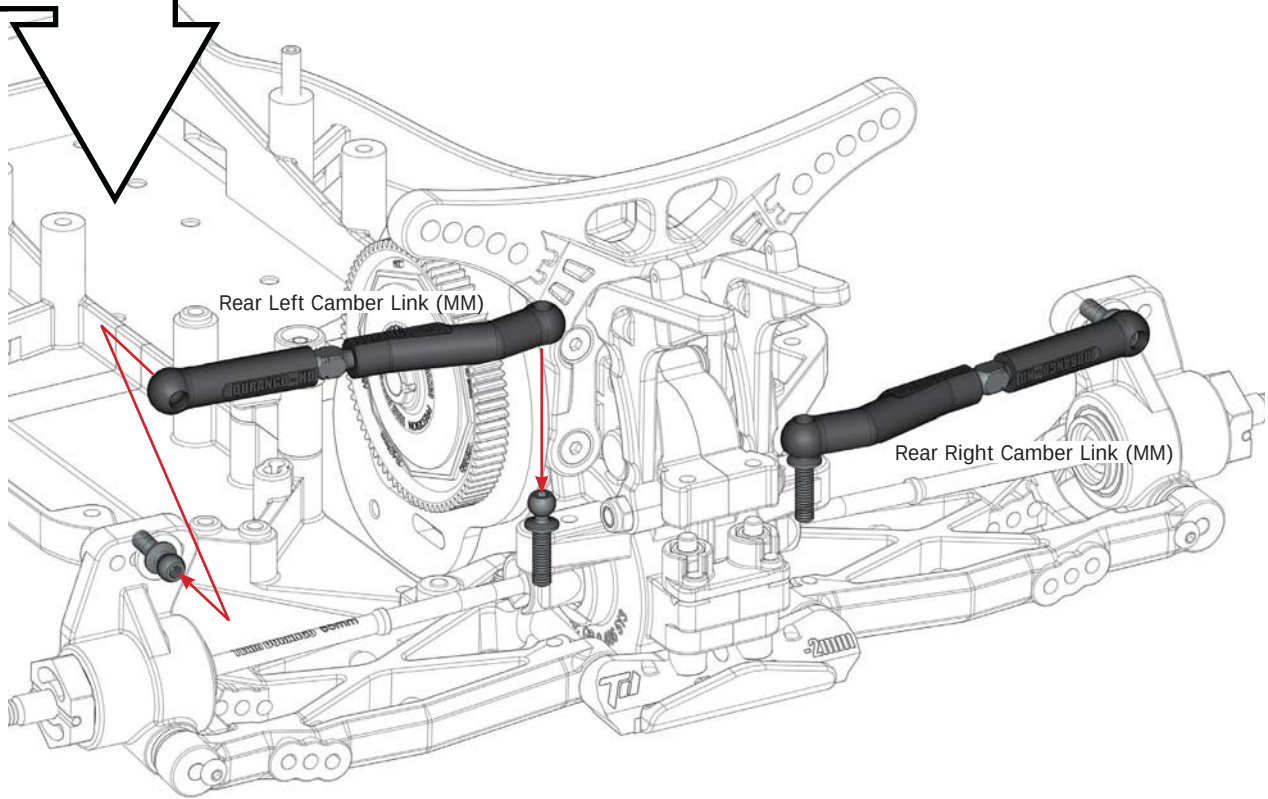
Rear Left Camber Link (MM)
Rear Right Camber Link (MM)

H 1

RM REAR MOTOR + MM MID MOTOR

DEX210 V2

H

1:1

BH M2x5mm
705008x4

SHIM2.6x5x0.5mm
709009x4

SHOCK O-RING
330609x8

SHOCK STOPPER
330027x4

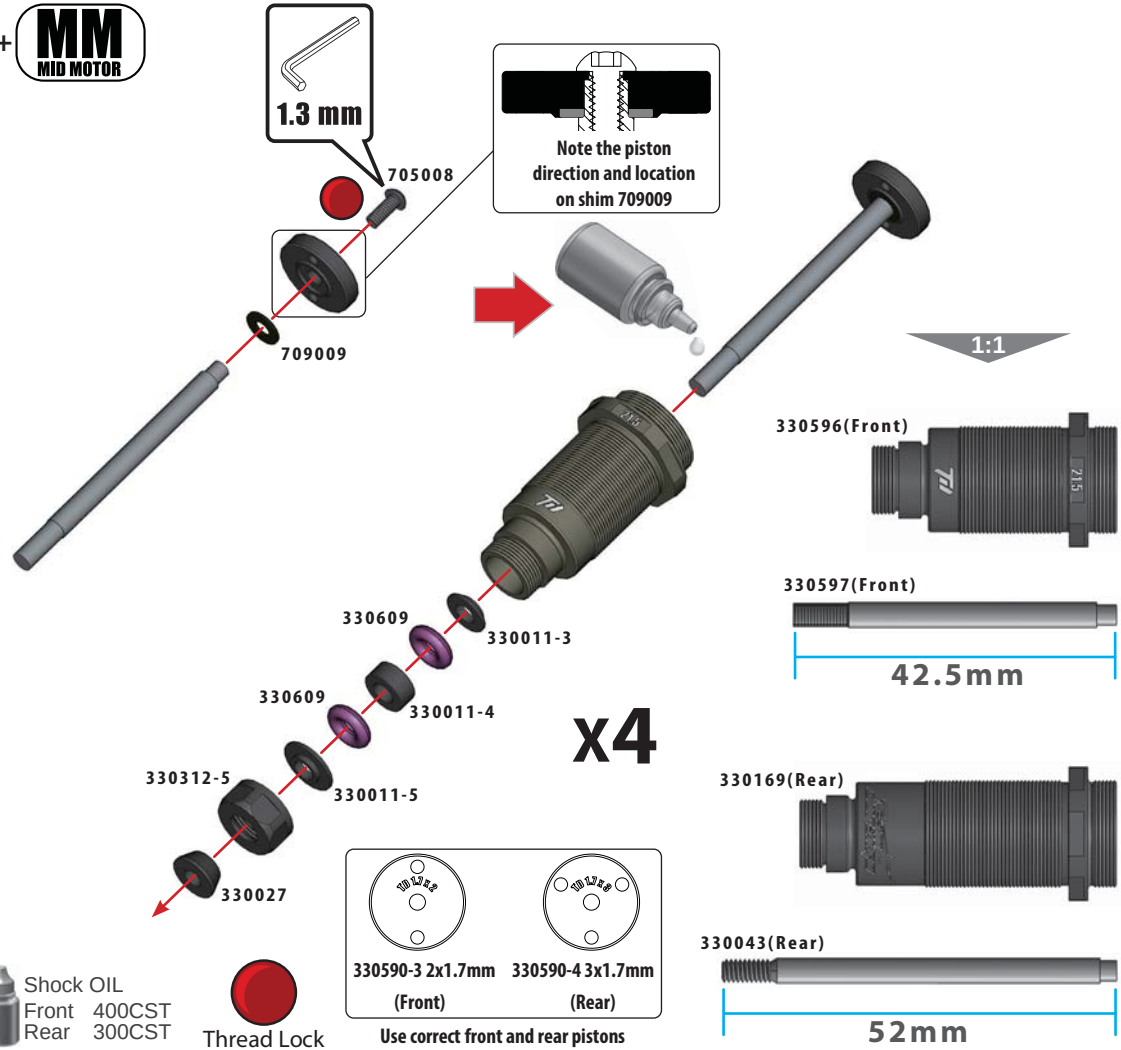

H2

RM REAR MOTOR + MM MID MOTOR

1:1

Shock Rod End
Pivot Ball
330346x2

PIVOT BALL B-TYPE
330034x2

x2

Front

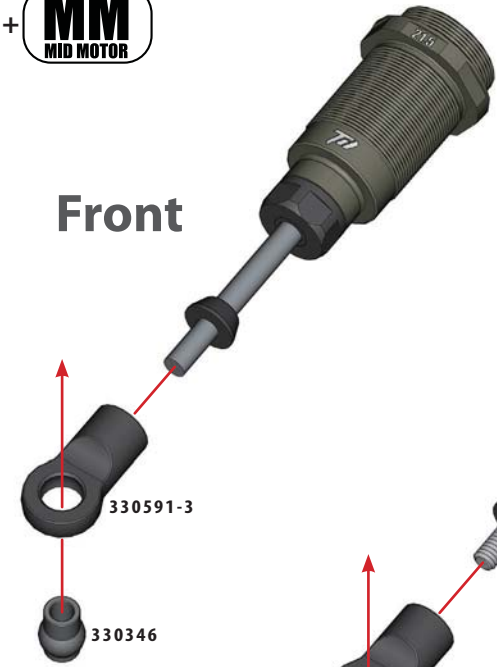

Rear

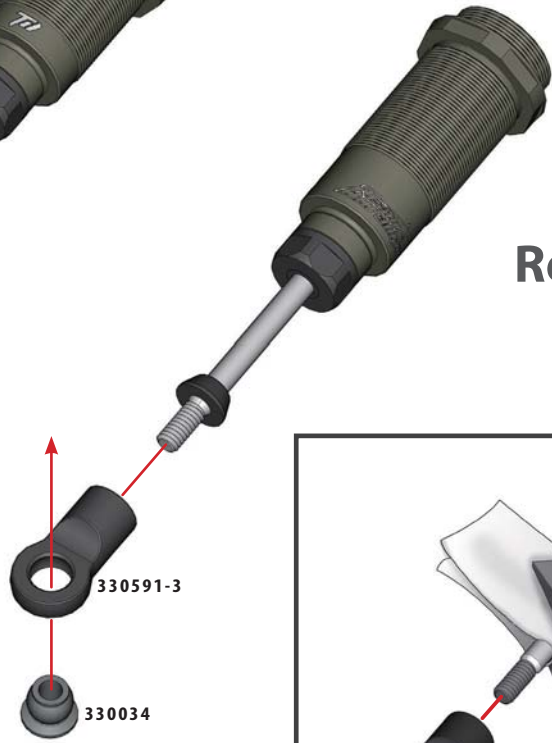

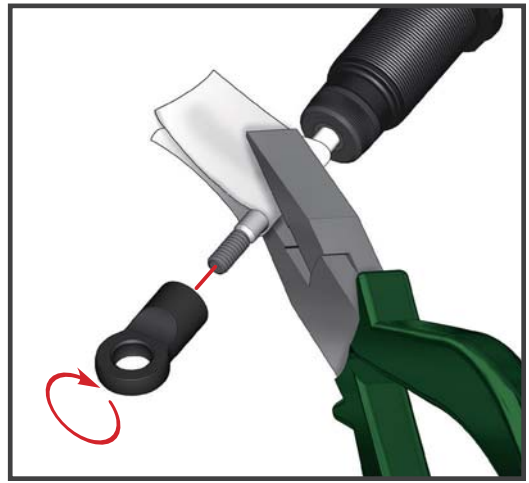

Ensure shock length is set as shown

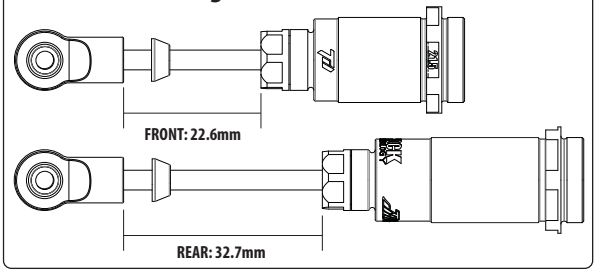

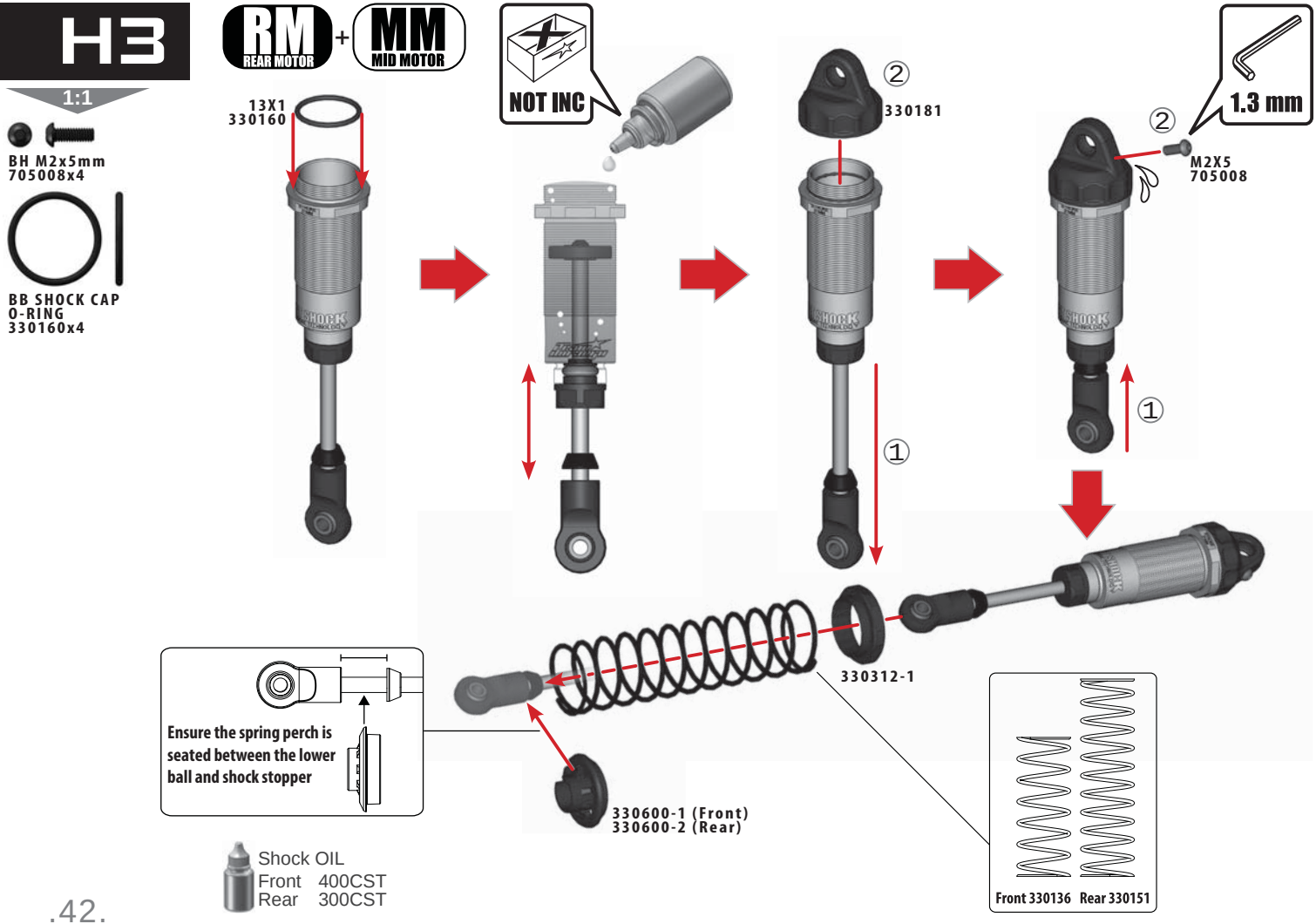
RM REAR MOTOR + MM MID MOTOR
1:1
BH M2x5mm
705008x4
BB SHOCK CAP
O-RING
330160x4
13X1
330160
NOT INC
②
330181
①
②
M2X5
705008
1.3 mm
①
330312-1
330600-1 (Front)
330600-2 (Rear)
Ensure the spring perch is seated between the lower ball and shock stopper
Shock OIL
Front 400CST
Rear 300CST
Front 330136 Rear 330151

H4

RM REAR MOTOR + MM MID MOTOR

1:1

STOP NUT: M3 LOW
715001x4

BH M3x18mm
705012x2

SHOCK MOUNT
SCREW M3 x24mm
708013x2

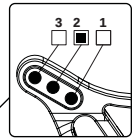

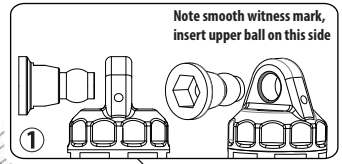

715001

330312-3

715001

Front Shock
Assembly

708013

705012

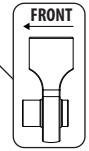

Note direction

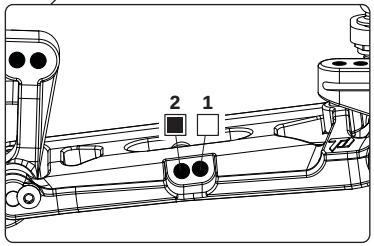

x2

RM REAR MOTOR + MM MID MOTOR

1:1

STOP NUT: M3 LOW
715001x4

BH M3x12mm
705004x2

SHOCK MOUNT
SCREW M3 x24mm
708013x2

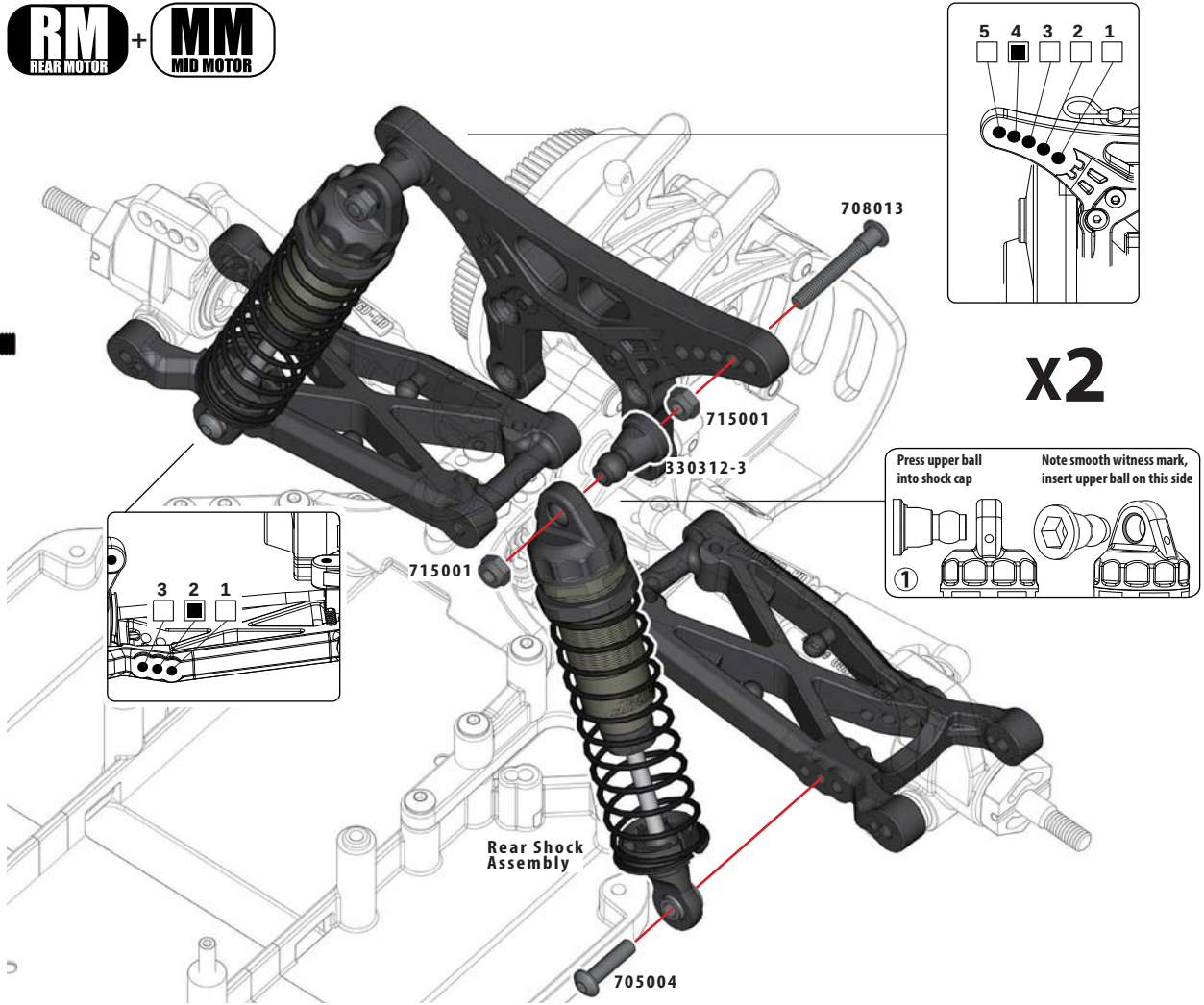

H6

RM REAR MOTOR + MM MID MOTOR

1:1

BH M3x8mm
705002x2

BH M3x5mm
705006x2

Shim 3x6x0.5mm
709032x4

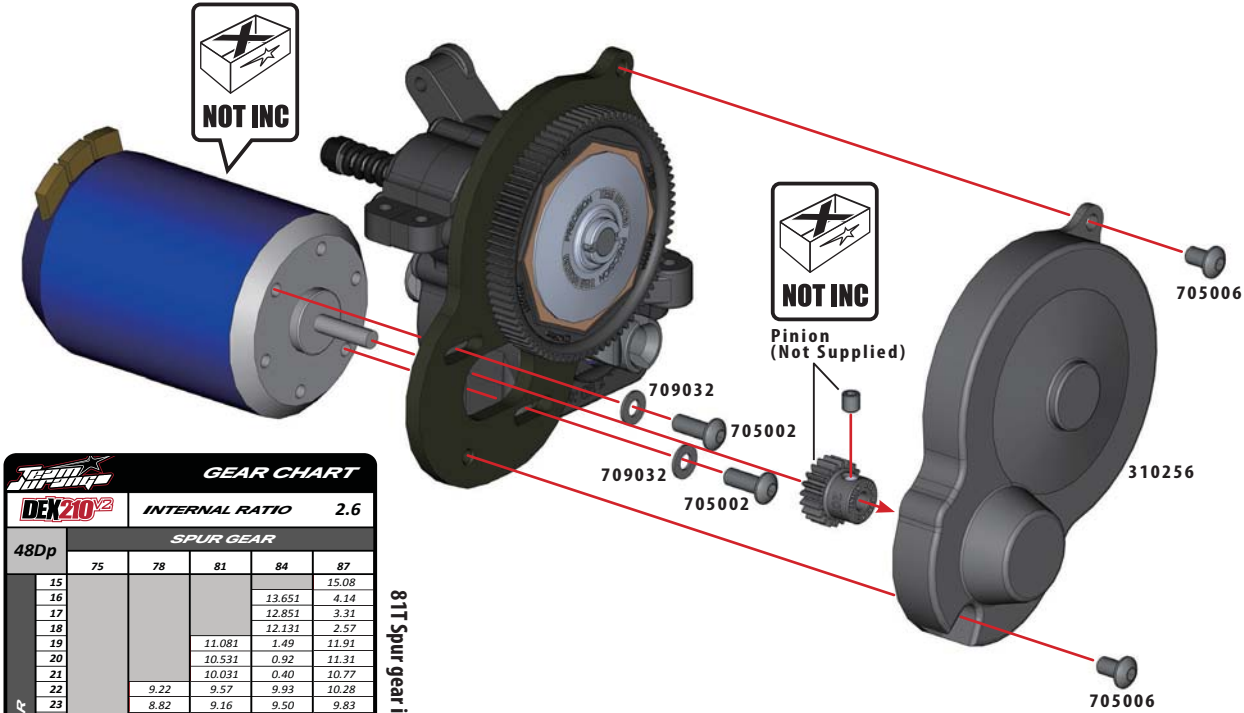

GEAR CHART					
DEX210V2	INTERNAL RATIO			2.6	
48Dp	SPUR GEAR				
PINION GEAR	75	78	81	84	87
15					15.08
16				13.651	4.14
17				12.851	3.31
18				12.131	2.57
19			11.081	1.49	11.91
20			10.531	0.92	11.31
21			10.031	0.40	10.77
22		9.22	9.57	9.93	10.28
23		8.82	9.16	9.50	9.83
24		8.45	8.78	9.10	9.43
25	7.80	8.11	8.42	8.74	9.05
26	7.50	7.80	8.10	8.40	8.70
27	7.22	7.51	7.80	8.09	
28	6.96	7.24	7.52	7.80	
29	6.72	6.99	7.26	7.53	
30	6.50	6.76	7.02		
31	6.29	6.54	6.79		
32	6.09	6.34	6.58		
33	5.91	6.15			
34	5.74	5.96			
35	5.57	5.79			
36	5.42				
37	5.27				
38	5.13				

81T Spur gear included in kit

I 1

RM REAR MOTOR + MM MID MOTOR

DEX210 V2

1:1

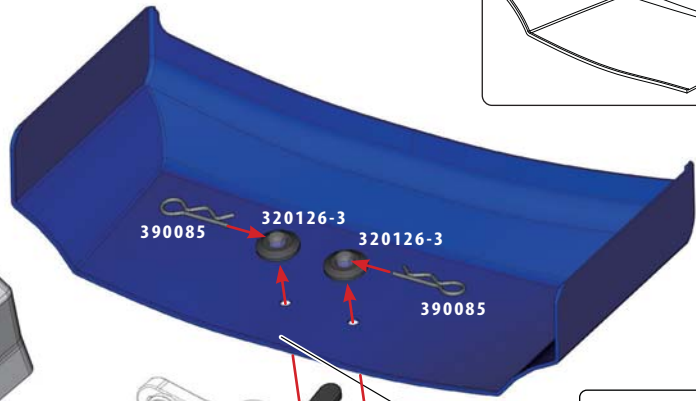

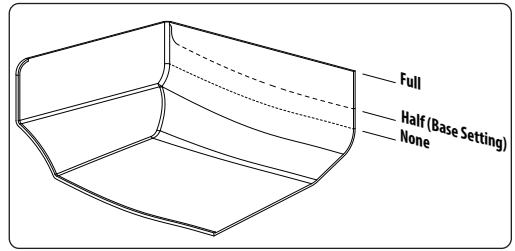

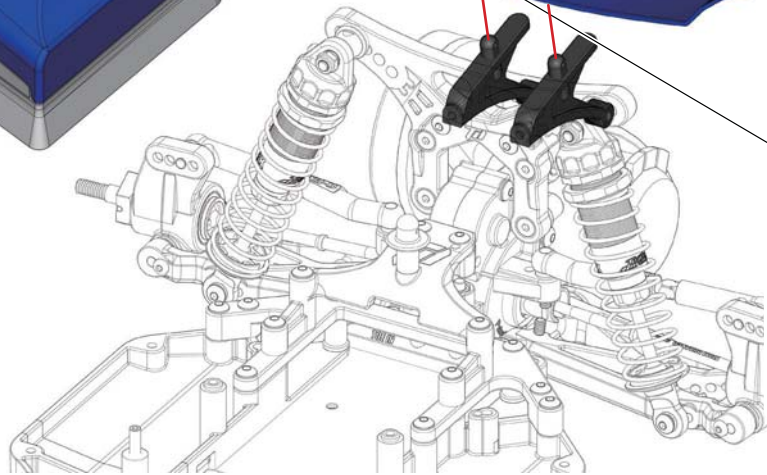

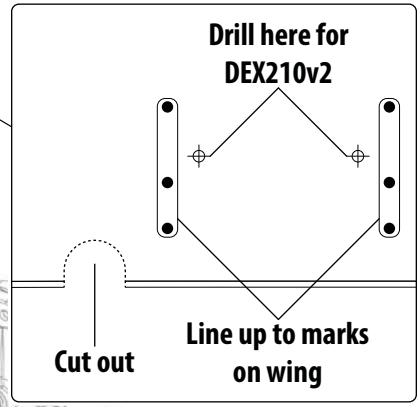

1:1 Scale - Place clear wing on illustration

RM REAR MOTOR + MM MID MOTOR

1:1

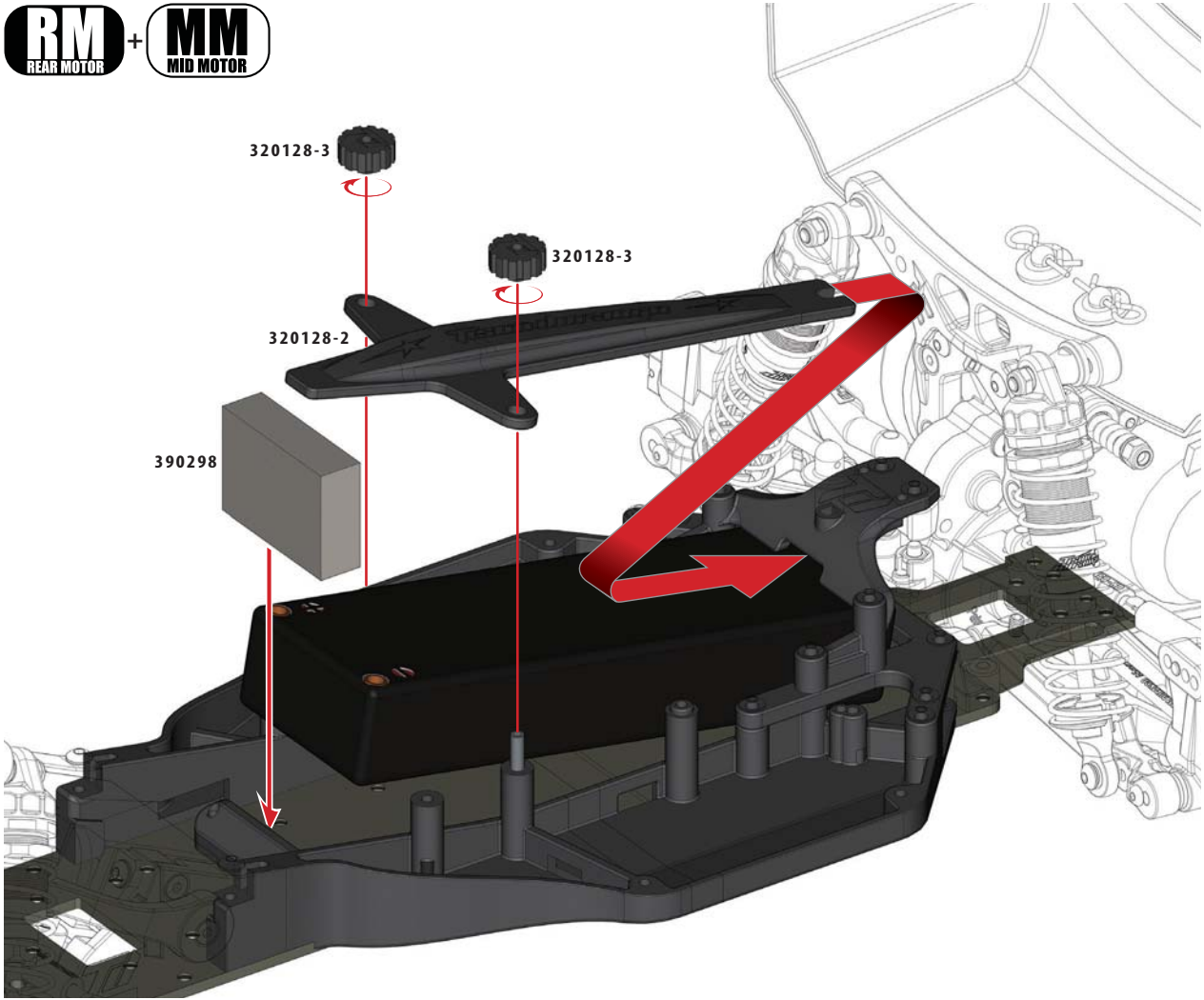

13

RM REAR MOTOR + MM MID MOTOR

1:1

BH M3x6mm
705001x2

BB 5x10x4mm
601002x4

NUT M4 FLANGED
RIFFLED FLAT-
STYLE
708005x2

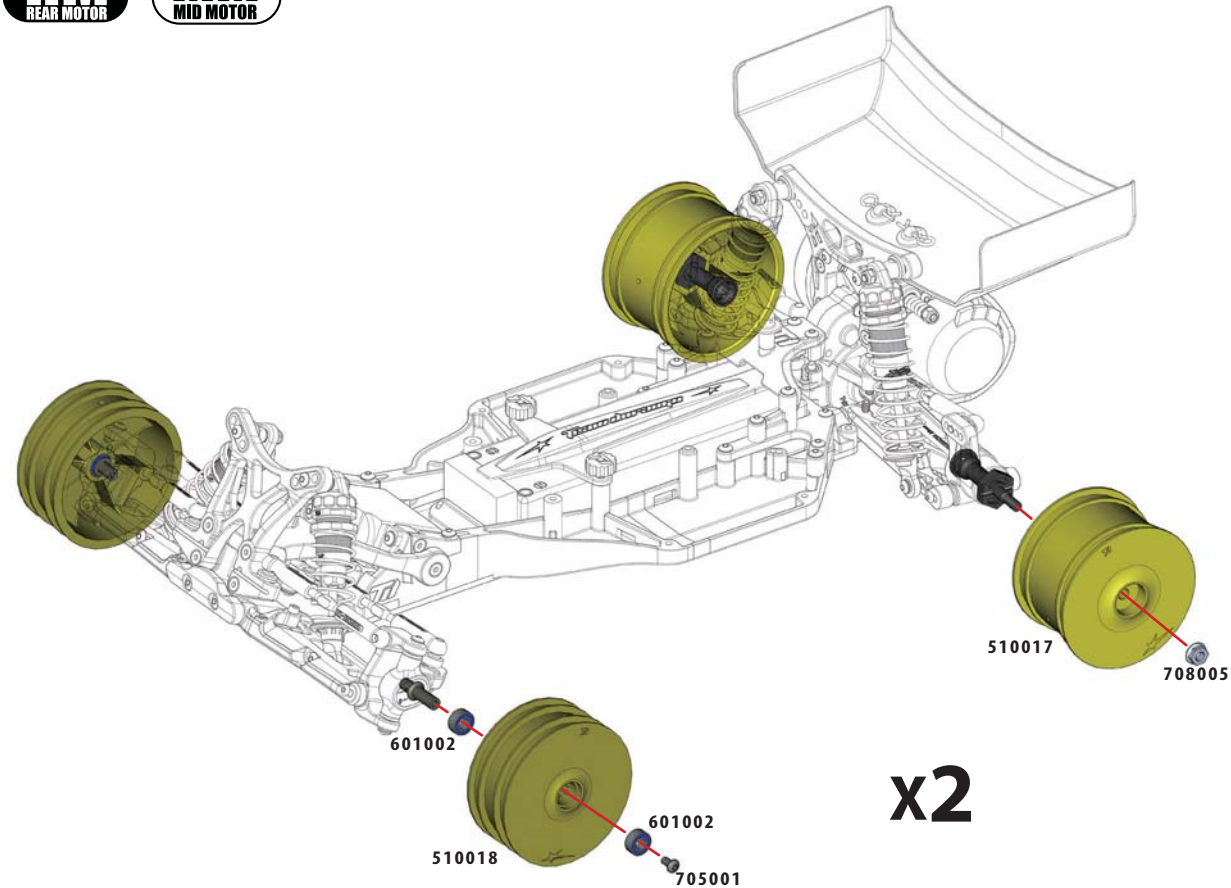

14

1:1

SETSCREW
M3x3mm
701004x1

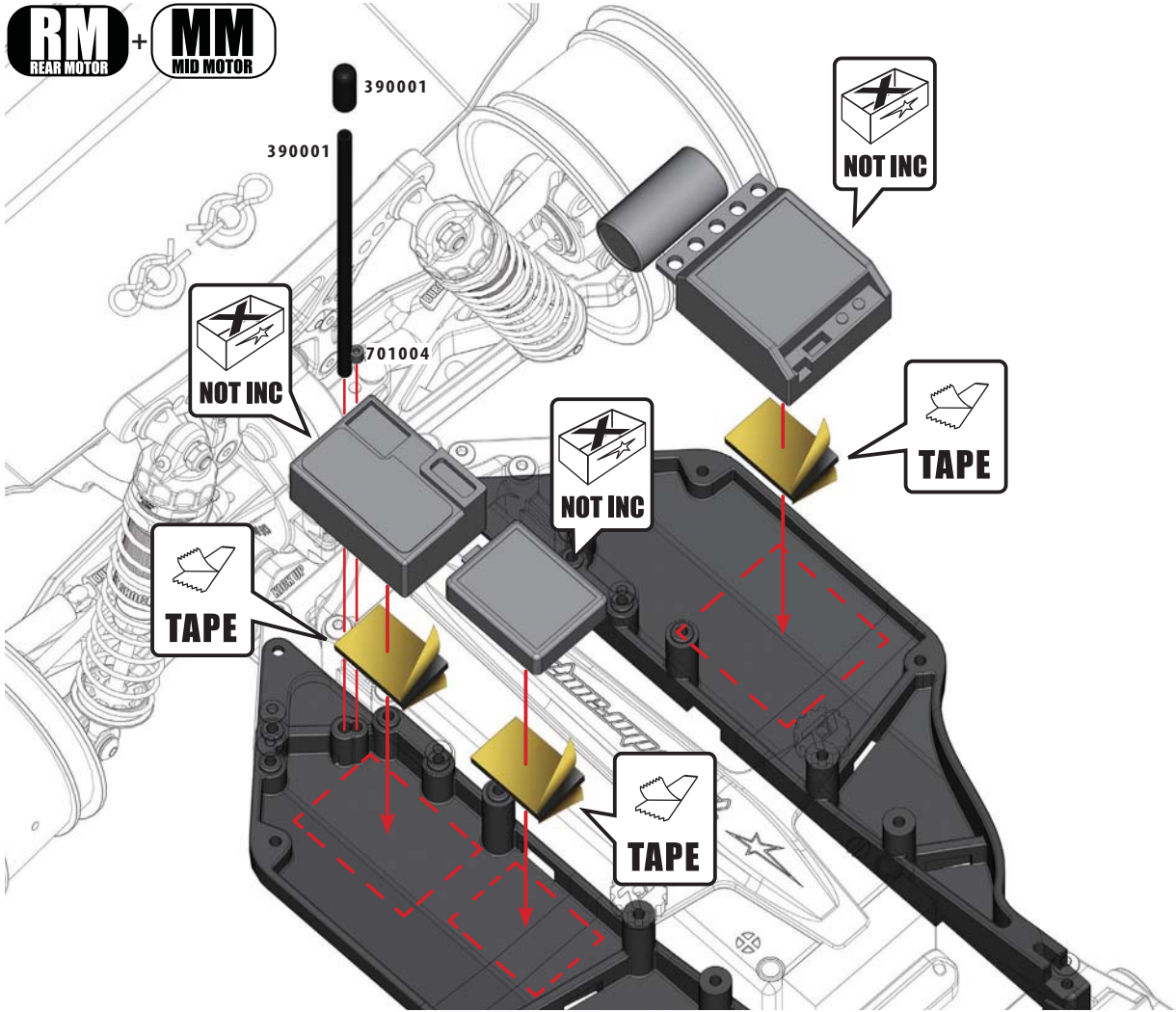

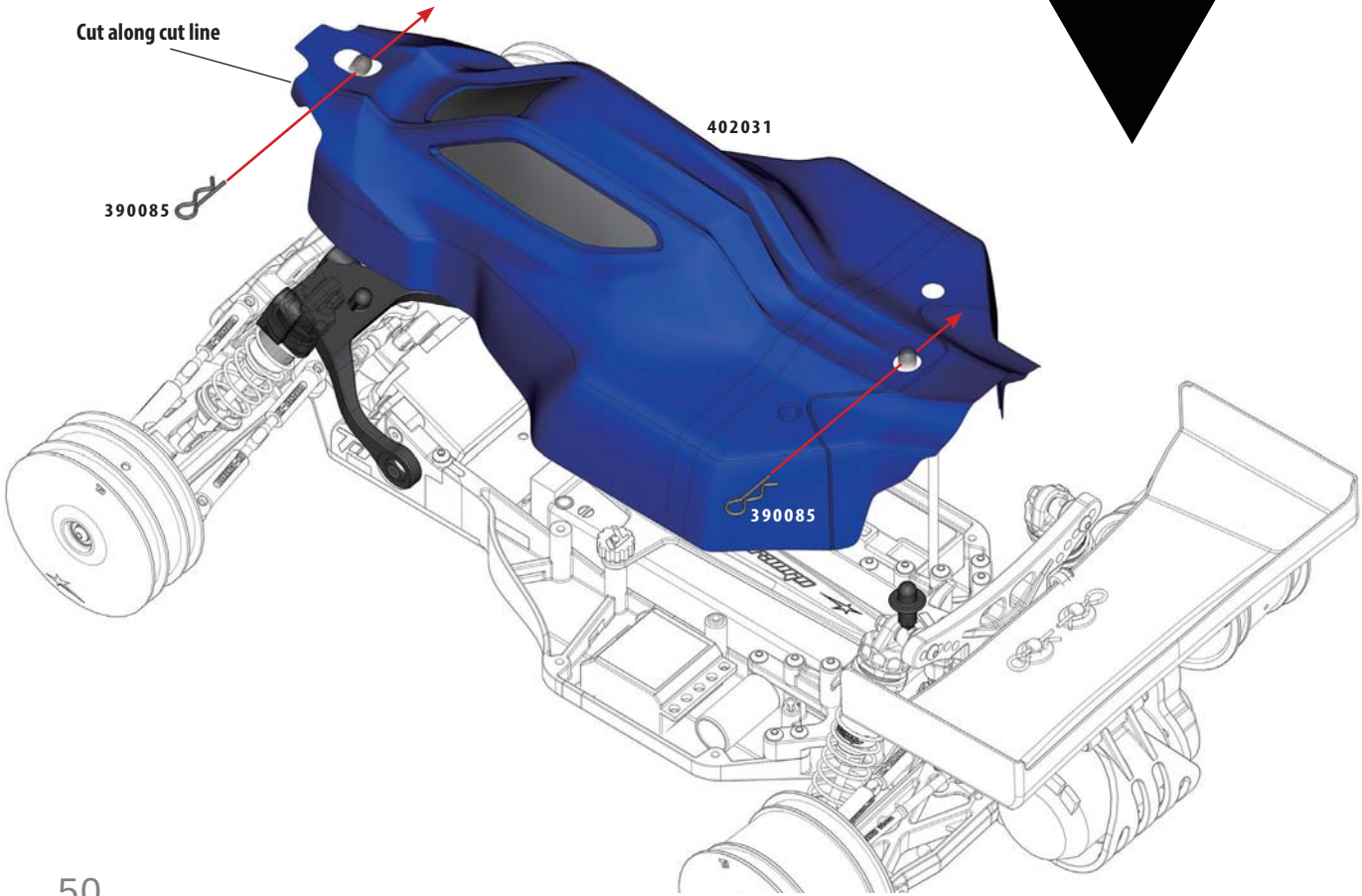
Cut along cut line
390085
402031
390085

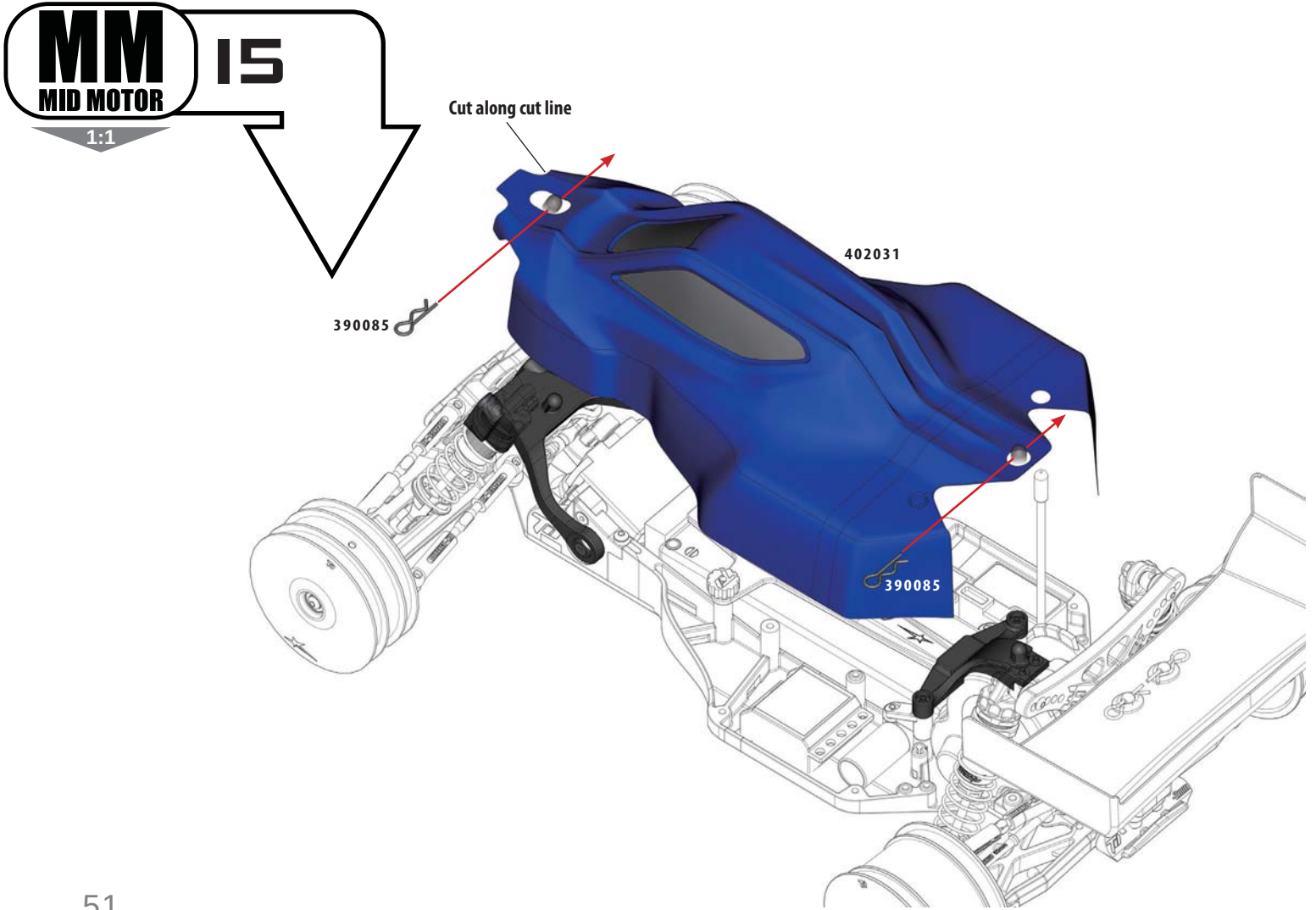
MM
MID MOTOR
15
1:1
Cut along cut line
402031
390085
390085

DEX210V2 LOW TRACTION DIRT

SETUP BLATT FICHE DE RÉGLAGE V1.0 E

NAME NAME NOM: Base setup - Low-Medium Traction Dirt
DATE DATUM DATE:
EVENT VERANSTALTUNG EVENEMENT:
TRACK STRECKE PISTE: Low Traction Dirt
AIR TEMP UMGEBUNGSTEMP. TEMPÉRATURE DE L'AIR: °
TRACK SIZE STRECKENGRÖSSE TAILLE DE LA PISTE: Medium
SURFACE STRECKENBELAG TYPE DE SURFACE: Dirt
TRACTION LEVEL GRIFF ADHÉRENCE: Low-Med
CONDITIONS WETTER NIVEAU D'HYDROMÉTRIE:

FRONT VORN AVANT

RIDE HEIGHT BODENFREIHEIT GARDE AU SOL: 19 mm
CAMBER ANGLE STURZ ANGLE DE CARROSSAGE: -1 °
TOE IN/OUT VONSPUR/NACHSPUR ANGLE DE PINCEMENT: +/- 0 °
SWAY BAR STABILISATOR BARRE ANTI-ROULIS: None mm
SWAY BAR LINK STABILISATOR HEBELLÄNGE LIEN DE LA BARRE ANTI-ROULIS: mm
WISHBONE DROOP* AUSFEDERWEG ACHSE DROOP DES TRIANGLES ARRIÈRES: Max mm
NOTES NOTIZEN REMARQUES

CASTOR ☐ 20° ■ 25° ☐ 30° ☐ 35°

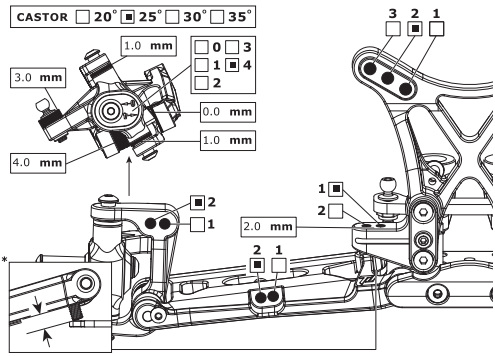

REAR HINTEN ARRIÈRE

RIDE HEIGHT BODENFREIHEIT GARDE AU SOL: 20 mm
CAMBER ANGLE STURZ ANGLE DE CORROSSAGE: -1 °
SWAY BAR STABILISATOR BARRE ANTI-ROULIS: None mm
SWAY BAR LINK STABILISATOR HEBELLÄNGE LIEN DE LA BARRE ANTI-ROULIS: mm
WISHBONE DROOP* AUSFEDERWEG ACHSE DROOP DES TRIANGLES ARRIÈRES: Max mm
NOTES NOTIZEN REMARQUES

WING FLÜGEL TYPE D'AILERON: Stock - Full

ALLOY OPTION

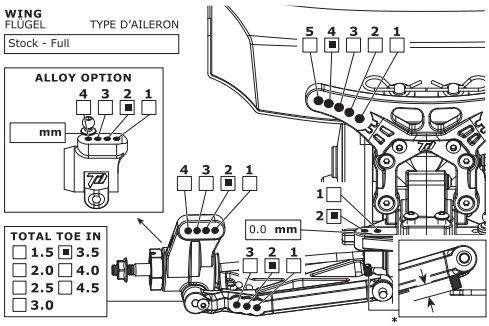

TOTAL TOE IN
☐ 1.5 ■ 3.5
☐ 2.0 ☐ 4.0
☐ 2.5 ☐ 4.5
☐ 3.0

MOTOR MOTOR MOTEUR:
SPUR GEAR HAUPTZAHNRAD COURONNE:
PINION GEAR RITZEL PIGNON:
BATTERY AKKU ACCUMULATEUR:
ESC SETTINGS REGLER PROGRAMM REGLAGE DU VARIATEUR:
DIFF. TYPE DIFF. TYP TYPE DE DIFF.: ■ BALL ☐ GEAR
DIFF. OIL DIFF. ÖL HUILE DE DIFF.: cst
BODY KÖRPER CARROSSERIE: Stock DEX210v2

CHASSIS TYPE
■ ALUMINIUM
☐ DIMEC
☐ DIMEC20

WEIGHT
■ 0g
☐ 15g
☐ 30g

RF ANTI-SQUAT
■ 0° ☐ 1.5° ☐ 3.0°
OPTIONAL RF HANGER

SHOCK POS.
■ RF ☐ RR

CHASSIS LGTH
☐ STANDARD
■ +8mm
☐ +24mm

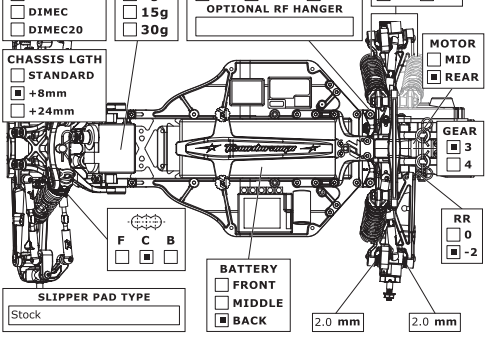

MOTOR
☐ MID
■ REAR

GEAR
■ 3
☐ 4

RR
☐ 0
■ -2

SLIPPER PAD TYPE
Stock

FRONT SHOCKS
VORNE DÄMPFER AMORTISSEURS AVANTS

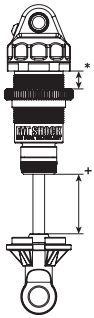

■ BIG BORE
☐ SLIM BORE

SPRINGS FEDERN RESSORTS: Black
REBOUND REBOUND REBOND: 0 %
PRELOAD* FEDERVORSPANNUNG PRÉCONTRAINTE: set with ride height mm
OIL WT. ÖLVISKOSITÄT VISCOSITÉ: 350 cst
PISTON KOLBEN PISTON: 3x 1.6mm
LENGTH+ LÄNGE LONGUEUR: mm
NOTES NOTIZEN REMARQUES

REAR SHOCKS
HINTEN DÄMPFER AMORTISSEURS ARRIÈRES

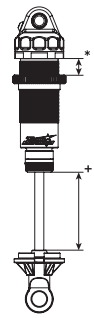

■ BIG BORE
☐ SLIM BORE

SPRINGS FEDERN RESSORTS: Light Blue
REBOUND REBOUND REBOND: 0 %
PRELOAD* FEDERVORSPANNUNG PRÉCONTRAINTE: set with ride height mm
OIL WT. ÖLVISKOSITÄT VISCOSITÉ: 300 cst
PISTON KOLBEN PISTON: 3x 1.7mm
LENGTH+ LÄNGE LONGUEUR: mm
NOTES NOTIZEN REMARQUES

TYRES REIFEN PNEUS

	FRONT	REAR
BRAND HERSTELLER MARQUE		
TREAD PROFIL PROFIL		
COMPOUND MISCHUNG DURETÉ		
INSERT EINLAGEN MOUSSE		
WHEEL FELGE JANTE	Team Durango	Team Durango

NOTES NOTIZEN REMARQUES: Tires are very specific for each track

RESULTS PLATZIERUNG RÉSULTAT

QUALIFYING POSITION VORLAUFERGEBNIS POSITION EN QUALIFICATION:
FINAL POSITION ENDPLATZIERUNG POSITION FINALE:
AVERAGE LAP DURCHSCHNITTSZEIT TEMPS AU TOUR MOYEN:
BEST LAP SCHNELLSTE RUNDE MEILLEUR TEMPS AU TOUR:
RACE TIME RENNDAUER DURÉE DE LA COURSE:

Team Durango SERIOUS ABOUT RACING

www.team-durango.com © ARRMA Durango Ltd. 2013

DEX210V2

HIGH TRACTION DIRT

SETUP BLATT FICHE DE RÉGLAGE V1.0 E

NAME NAME NOM: Base setup - High Traction Dirt

DATE DATUM DATE:

EVENT VERANSTALTUNG EVENEMENT:

TRACK STRECKE PISTE: High Traction Dirt

AIR TEMP UMGEBUNGSTEMP. TEMPÉRATURE DE L'AIR: °

TRACK SIZE STRECKENGRÖSSE TAILLE DE LA PISTE: Medium

SURFACE STRECKENBELAG TYPE DE SURFACE: Dirt

TRACTION LEVEL GRIFF ADHÉRENCE: Medium

CONDITIONS WETTER NIVEAU D'HYDROMÉTRIE:

FRONT VORN AVANT

RIDE HEIGHT BODENFREIHEIT GARDE AU SOL: 19 mm

CAMBER ANGLE STURZ ANGLE DE CARROSSAGE: -1 °

TOE IN/OUT VONSPUR/NACHSPUR ANGLE DE PINCEMENT: +/- 0 °

SWAY BAR STABILISATOR BARRE ANTI-ROULIS: None mm

SWAY BAR LINK STABILISATOR HEBELLÄNGE LIEN DE LA BARRE ANTI-ROULIS: mm

WISHBONE DROOP* AUSFEDERWEG ACHSE DROOP DES TRIANGLES ARRIÈRES: Max mm

NOTES NOTIZEN REMARQUES:

CASTOR ☐ 20° ■ 25° ☐ 30° ☐ 35°

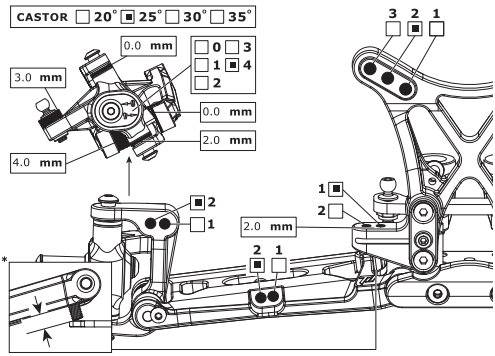

REAR HINTEN ARRIÈRE

RIDE HEIGHT BODENFREIHEIT GARDE AU SOL: 20 mm

CAMBER ANGLE STURZ ANGLE DE CORROSSAGE: -1 °

SWAY BAR STABILISATOR BARRE ANTI-ROULIS: None mm

SWAY BAR LINK STABILISATOR HEBELLÄNGE LIEN DE LA BARRE ANTI-ROULIS: mm

WISHBONE DROOP* AUSFEDERWEG ACHSE DROOP DES TRIANGLES ARRIÈRES: Max mm

NOTES NOTIZEN REMARQUES:

WING FLÜGEL TYPE D'AILERON: Stock - Half cut

ALLOY OPTION

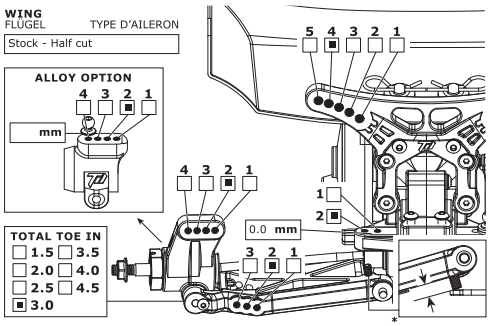

TOTAL TOE IN
☐ 1.5 ☐ 3.5
☐ 2.0 ☐ 4.0
☐ 2.5 ☐ 4.5
■ 3.0

MOTOR MOTOR MOTEUR:

SPUR GEAR HAUPTZAHNRAD COURONNE:

PINION GEAR RITZEL PIGNON:

BATTERY AKKU ACCUMULATEUR:

ESC SETTINGS REGLER PROGRAMM REGLAGE DU VARIATEUR:

DIFF. TYPE DIFF. TYP TYPE DE DIFF.
■ BALL ☐ GEAR

DIFF. OIL DIFF. ÖL HUILE DE DIFF.: cst

BODY KÖRPER CARROSSERIE: Stock DEX210v2

CHASSIS TYPE
■ ALUMINIUM
☐ DIMEC
☐ DIMEC20

WEIGHT
■ 0g
☐ 15g
☐ 30g

RF ANTI-SQUAT
■ 0° ☐ 1.5° ☐ 3.0°
OPTIONAL RF HANGER

SHOCK POS.
■ RF ☐ RR

CHASSIS LGTH
☐ STANDARD
■ +8mm
☐ +24mm

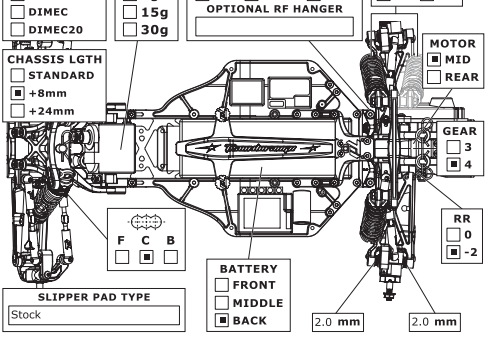

SLIPPER PAD TYPE: Stock

FRONT SHOCKS
VORNE DÄMPFER AMORTISSEURS AVANTS

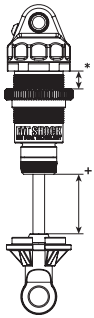

■ BIG BORE
☐ SLIM BORE

SPRINGS FEDERN RESSORTS: Black

REBOUND REBOUND REBOND: 0 %

PRELOAD* FEDERVORSPANNUNG PRÉCONTRAINTE: set with ride height mm

OIL WT. ÖLVISKOSITÄT VISCOSITÉ: 350 cst

PISTON KOLBEN PISTON: 3x 1.6mm

LENGTH+ LÄNGE LONGUEUR: mm

NOTES NOTIZEN REMARQUES:

REAR SHOCKS
HINTEN DÄMPFER AMORTISSEURS ARRIÈRES

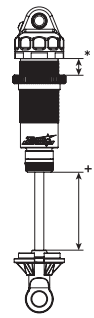

■ BIG BORE
☐ SLIM BORE

SPRINGS FEDERN RESSORTS: Light Blue

REBOUND REBOUND REBOND: 0 %

PRELOAD* FEDERVORSPANNUNG PRÉCONTRAINTE: set with ride height mm

OIL WT. ÖLVISKOSITÄT VISCOSITÉ: 300 cst

PISTON KOLBEN PISTON: 3x 1.7mm

LENGTH+ LÄNGE LONGUEUR: mm

NOTES NOTIZEN REMARQUES:

TYRES REIFEN PNEUS

	FRONT	REAR
BRAND HERSTELLER MARQUE		
TREAD PROFIL PROFIL		
COMPOUND MISCHUNG DURETÉ		
INSERT EINLAGEN MOUSSE		
WHEEL FELGE JANTE	Team Durango	Team Durango

NOTES NOTIZEN REMARQUES: Tires are very specific for each track

RESULTS PLATZIERUNG RÉSULTAT

QUALIFYING POSITION VORLAUFERGEBNIS POSITION EN QUALIFICATION:

FINAL POSITION ENDPLATZIERUNG POSITION FINALE:

AVERAGE LAP DURCHSCHNITTSZEIT TEMPS AU TOUR MOYEN:

BEST LAP SCHNELLSTE RUNDE MEILLEUR TEMPS AU TOUR:

RACE TIME RENNDAUER DURÉE DE LA COURSE:

Team Durango
SERIOUS ABOUT RACING

www.team-durango.com © ARRMA Durango Ltd. 2013

DEX210V2 HIGH TRACTION ASTROTURF

SETUP BLATT FICHE DE RÉGLAGE V1.0 E

NAME NAME NOM: Base setup - High Traction AstroTurf
DATE DATUM DATE:
EVENT VERANSTALTUNG EVENEMENT:
TRACK STRECKE PISTE: High Traction AstroTurf
AIR TEMP UMGEBUNGSTEMP. TEMPÉRATURE DE L'AIR: °
TRACK SIZE STRECKENGRÖSSE TAILLE DE LA PISTE: Medium
SURFACE STRECKENBELAG TYPE DE SURFACE: AstroTurf
TRACTION LEVEL GRIFF ADHÉRENCE: High
CONDITIONS WETTER NIVEAU D'HYDROMÉTRIE:

FRONT VORN AVANT

RIDE HEIGHT BODENFREIHEIT GARDE AU SOL: 19 mm
CAMBER ANGLE STURZ ANGLE DE CARROSSAGE: -1 °
TOE IN/OUT VONSPUR/NACHSPUR ANGLE DE PINCEMENT: +/- 0 °
SWAY BAR STABILISATOR BARRE ANTI-ROULIS: None mm
SWAY BAR LINK STABILISATOR HEBELLÄNGE LIEN DE LA BARRE ANTI-ROULIS: mm
WISHBONE DROOP* AUSFEDERWEG ACHSE DROOP DES TRIANGLES ARRIÈRES: Max mm
NOTES NOTIZEN REMARQUES

CASTOR ☐ 20° ■ 25° ☐ 30° ☐ 35°

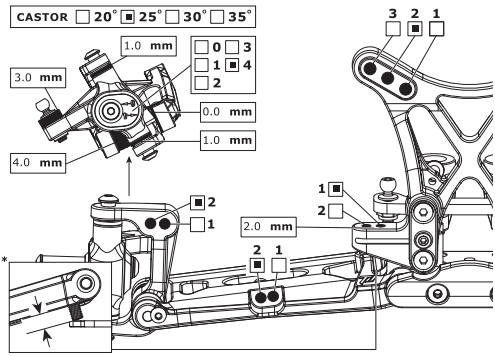

REAR HINTEN ARRIÈRE

RIDE HEIGHT BODENFREIHEIT GARDE AU SOL: 20 mm
CAMBER ANGLE STURZ ANGLE DE CORROSSAGE: -1 °
SWAY BAR STABILISATOR BARRE ANTI-ROULIS: None mm
SWAY BAR LINK STABILISATOR HEBELLÄNGE LIEN DE LA BARRE ANTI-ROULIS: mm
WISHBONE DROOP* AUSFEDERWEG ACHSE DROOP DES TRIANGLES ARRIÈRES: Max mm
NOTES NOTIZEN REMARQUES

WING FLÜGEL TYPE D'AILERON: Stock - Half cut

ALLOY OPTION

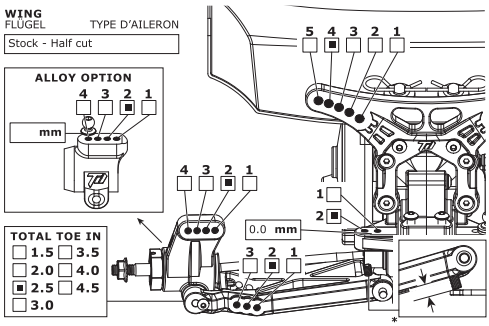

TOTAL TOE IN
☐ 1.5 ☐ 3.5
☐ 2.0 ☐ 4.0
■ 2.5 ☐ 4.5
☐ 3.0

MOTOR MOTOR MOTEUR
SPUR GEAR HAUPTZAHNRAD COURONNE
PINION GEAR RITZEL PIGNON
BATTERY AKKU ACCUMULATEUR
ESC SETTINGS REGLER PROGRAMM REGLAGE DU VARIATEUR
DIFF. TYPE DIFF. TYP TYPE DE DIFF.: ■ BALL ☐ GEAR
DIFF. OIL DIFF. ÖL HUILE DE DIFF.: cst
BODY KÖRPER CARROSSERIE: Stock DEX210v2

CHASSIS TYPE
■ ALUMINIUM
☐ DIMEC
☐ DIMEC20

WEIGHT
■ 0g
☐ 15g
☐ 30g

RF ANTI-SQUAT
■ 0° ☐ 1.5° ☐ 3.0°
OPTIONAL RF HANGER

SHOCK POS.
■ RF ☐ RR

CHASSIS LGTH
☐ STANDARD
■ +8mm
☐ +24mm

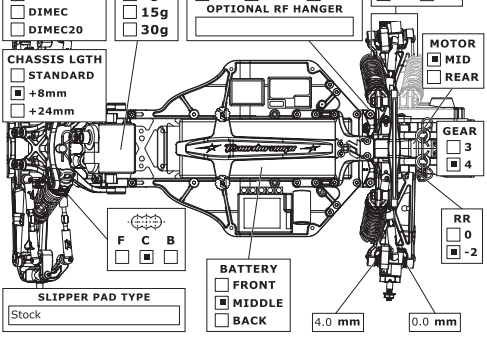

MOTOR
■ MID
☐ REAR

GEAR
☐ 3
■ 4

RR
☐ 0
■ -2

SLIPPER PAD TYPE: Stock

FRONT SHOCKS
VORNE DÄMPFER AMORTISSEURS AVANTS

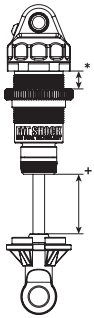

■ BIG BORE
☐ SLIM BORE

SPRINGS FEDERN RESSORTS: Black
REBOUND REBOUND REBOND: 0 %
PRELOAD* FEDERVORSPANNUNG PRÉCONTRAINTE: set with ride height mm
OIL WT. ÖLVISKOSITÄT VISCOSITÉ: 350 cst
PISTON KOLBEN PISTON: 3x 1.6mm
LENGTH+ LÄNGE LONGUEUR: mm
NOTES NOTIZEN REMARQUES

REAR SHOCKS
HINTEN DÄMPFER AMORTISSEURS ARRIÈRES

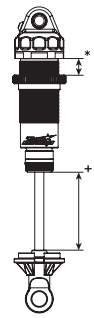

■ BIG BORE
☐ SLIM BORE

SPRINGS FEDERN RESSORTS: Light Blue
REBOUND REBOUND REBOND: 0 %
PRELOAD* FEDERVORSPANNUNG PRÉCONTRAINTE: set with ride height mm
OIL WT. ÖLVISKOSITÄT VISCOSITÉ: 300 cst
PISTON KOLBEN PISTON: 3x 1.7mm
LENGTH+ LÄNGE LONGUEUR: mm
NOTES NOTIZEN REMARQUES

TYRES REIFEN PNEUS

	FRONT	REAR
BRAND HERSTELLER MARQUE		
TREAD PROFIL PROFIL		
COMPOUND MISCHUNG DURETÉ		
INSERT EINLAGEN MOUSSE		
WHEEL FELGE JANTE	Team Durango	Team Durango

NOTES NOTIZEN REMARQUES: Tires are very specific for each track

RESULTS PLATZIERUNG RÉSULTAT

QUALIFYING POSITION VORLAUFERGEBNIS POSITION EN QUALIFICATION:
FINAL POSITION ENDPLATZIERUNG POSITION FINALE:
AVERAGE LAP DURCHSCHNITTSZEIT TEMPS AU TOUR MOYEN:
BEST LAP SCHNELLSTE RUNDE MEILLEUR TEMPS AU TOUR:
RACE TIME RENNDAUER DURÉE DE LA COURSE:

Team Durango SERIOUS ABOUT RACING

www.team-durango.com © ARRMA Durango Ltd. 2013

DEX210V2 MEDIUM TRACTION CARPET

SETUP BLATT FICHE DE RÉGLAGE V1.0 E

NAME NAME NOM: Base setup - Medium Traction Carpet
DATE DATUM DATE:
EVENT VERANSTALTUNG EVENEMENT:
TRACK STRECKE PISTE: Medium Traction Carpet
AIR TEMP UMGEBUNGSTEMP. TEMPÉRATURE DE L'AIR: °
TRACK SIZE STRECKENGRÖSSE TAILLE DE LA PISTE: Small
SURFACE STRECKENBELAG TYPE DE SURFACE: Carpet
TRACTION LEVEL GRIFF ADHÉRENCE: Medium
CONDITIONS WETTER NIVEAU D'HYDROMÉTRIE:

FRONT VORN AVANT

RIDE HEIGHT BODENFREIHEIT GARDE AU SOL: 19 mm
CAMBER ANGLE STURZ ANGLE DE CARROSSAGE: -1 °
TOE IN/OUT VONSPUR/NACHSPUR ANGLE DE PINCEMENT: +/- 0 °
SWAY BAR STABILISATOR BARRE ANTI-ROULIS: None mm
SWAY BAR LINK STABILISATOR HEBELLÄNGE LIEN DE LA BARRE ANTI-ROULIS: mm
WISHBONE DROOP* AUSFEDERWEG ACHSE DROOP DES TRIANGLES ARRIÈRES: Max mm
NOTES NOTIZEN REMARQUES

CASTOR ☐ 20° ■ 25° ☐ 30° ☐ 35°

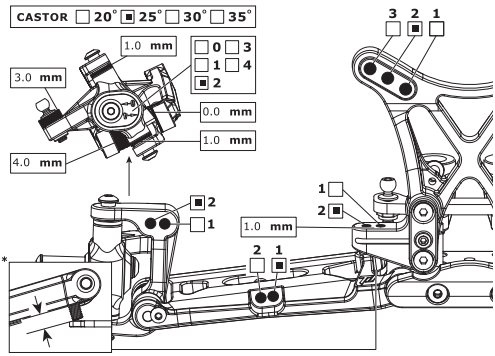

REAR HINTEN ARRIÈRE

RIDE HEIGHT BODENFREIHEIT GARDE AU SOL: 20 mm
CAMBER ANGLE STURZ ANGLE DE CORROSSAGE: -1 °
SWAY BAR STABILISATOR BARRE ANTI-ROULIS: None mm
SWAY BAR LINK STABILISATOR HEBELLÄNGE LIEN DE LA BARRE ANTI-ROULIS: mm
WISHBONE DROOP* AUSFEDERWEG ACHSE DROOP DES TRIANGLES ARRIÈRES: Max mm
NOTES NOTIZEN REMARQUES

WING FLÜGEL TYPE D'AILERON: Stock - Half cut

ALLOY OPTION 4 3 ■ 2 1 — mm

TOTAL TOE IN ☐ 1.5 ☐ 3.5 ☐ 2.0 ☐ 4.0 ■ 2.5 ☐ 4.5 ☐ 3.0

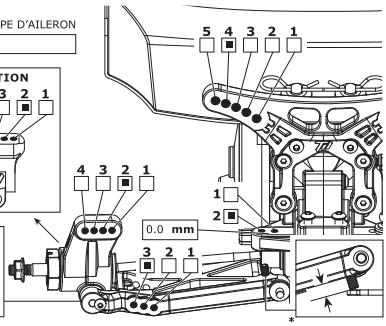

MOTOR MOTOR MOTEUR
SPUR GEAR HAUPTZAHNRAD COURONNE
PINION GEAR RITZEL PIGNON
BATTERY AKKU ACCUMULATEUR
ESC SETTINGS REGLER PROGRAMM REGLAGE DU VARIATEUR
DIFF. TYPE DIFF. TYP TYPE DE DIFF. ■ BALL ☐ GEAR
DIFF. OIL DIFF. ÖL HUILE DE DIFF. cst
BODY KÖRPER CARROSSERIE: Stock DEX210v2

CHASSIS TYPE ■ ALUMINIUM ☐ DIMEC ☐ DIMEC20
WEIGHT ■ 0g ☐ 15g ☐ 30g
RF ANTI-SQUAT ■ 0° ☐ 1.5° ☐ 3.0° — OPTIONAL RF HANGER
SHOCK POS. ■ RF ☐ RR
CHASSIS LGTH ☐ STANDARD ■ +8mm ☐ +24mm
MOTOR ■ MID ☐ REAR
GEAR ☐ 3 ■ 4
RR ☐ 0 ■ -2
F C B ☐ ☐ ☐
BATTERY ☐ FRONT ☐ MIDDLE ■ BACK
SLIPPER PAD TYPE: Stock
2.0 mm 2.0 mm

FRONT SHOCKS
VORNE DÄMPFER AMORTISSEURS AVANTS

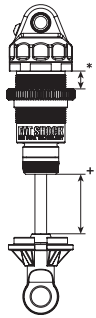

SPRINGS FEDERN RESSORTS: Black
REBOUND REBOUND REBOND: 0 %
PRELOAD* FEDERVORSPANNUNG PRÉCONTRAINTE: set with ride height mm
OIL WT. ÖLVISKOSITÄT VISCOSITÉ: 350 cst
PISTON KOLBEN PISTON: 3x 1.6mm
LENGTH+ LÄNGE LONGUEUR: mm
NOTES NOTIZEN REMARQUES

■ BIG BORE ☐ SLIM BORE

REAR SHOCKS
HINTEN DÄMPFER AMORTISSEURS ARRIÈRES

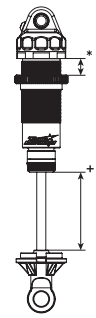

SPRINGS FEDERN RESSORTS: Light Blue
REBOUND REBOUND REBOND: 0 %
PRELOAD* FEDERVORSPANNUNG PRÉCONTRAINTE: set with ride height mm
OIL WT. ÖLVISKOSITÄT VISCOSITÉ: 300 cst
PISTON KOLBEN PISTON: 3x 1.7mm
LENGTH+ LÄNGE LONGUEUR: mm
NOTES NOTIZEN REMARQUES

■ BIG BORE ☐ SLIM BORE

TYRES REIFEN PNEUS

	FRONT	REAR
BRAND HERSTELLER MARQUE		
TREAD PROFIL PROFIL	Staggered Rib	Pin
COMPOUND MISCHUNG DURETÉ		
INSERT EINLAGEN MOUSSE		
WHEEL FELGE JANTE	Team Durango	Team Durango

NOTES NOTIZEN REMARQUES: Tires are very specific for each track

RESULTS PLATZIERUNG RÉSULTAT

QUALIFYING POSITION VORLAUFERGEBNIS POSITION EN QUALIFICATION:
FINAL POSITION ENDPLATZIERUNG POSITION FINALE:
AVERAGE LAP DURCHSCHNITTSZEIT TEMPS AU TOUR MOYEN:
BEST LAP SCHNELLSTE RUNDE MEILLEUR TEMPS AU TOUR:
RACE TIME RENNDAUER DURÉE DE LA COURSE:

Team Durango SERIOUS ABOUT RACING

www.team-durango.com © ARRMA Durango Ltd. 2013

Notes

Notes

Exploded View

Steering

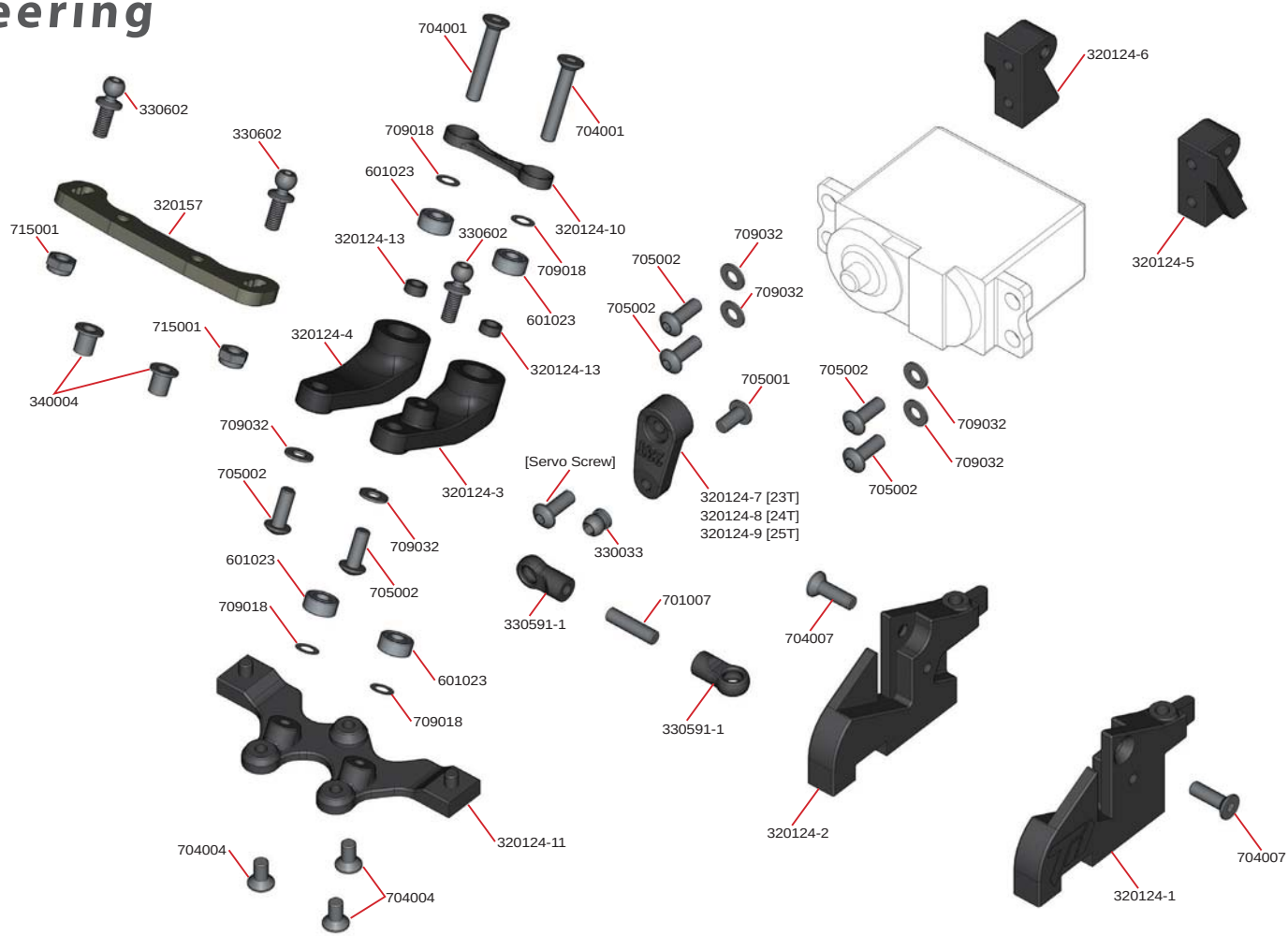
704001
704001
330602
330602
709018
601023
320157
715001
320124-13
330602
320124-10
709018
601023
320124-4
715001
340004
320124-13
709032
705002
705002
709032
705001
705002
709032
709032
705002
320124-3
[Servo Screw]
320124-7 [23T]
320124-8 [24T]
320124-9 [25T]
330033
709032
601023
705002
709018
330591-1
701007
704007
601023
709018
330591-1
320124-11
320124-2
704004
704004
704007
320124-1
320124-6
320124-5

Front/Rear Hubs

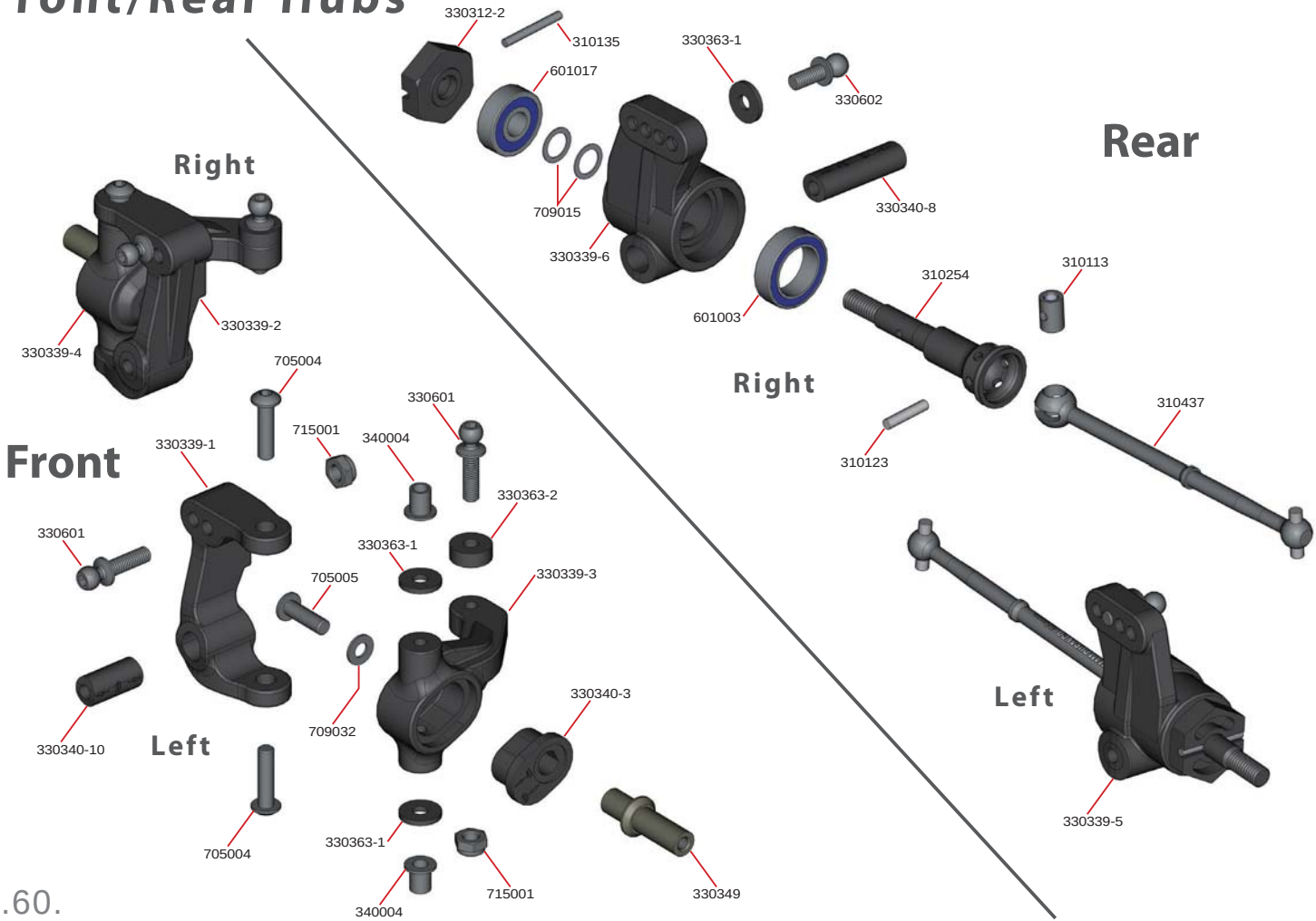

Front Assembly

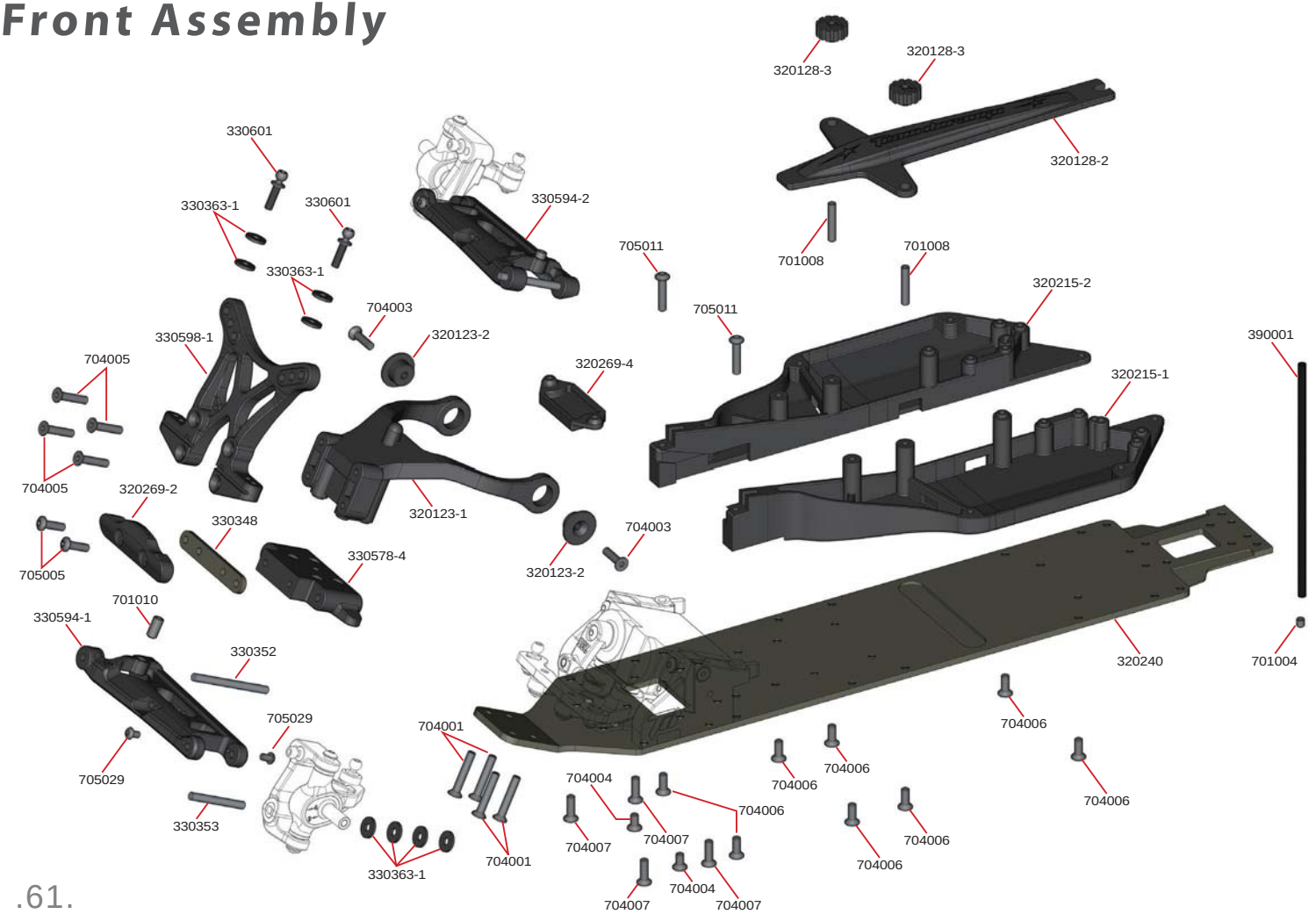

Ball Differential

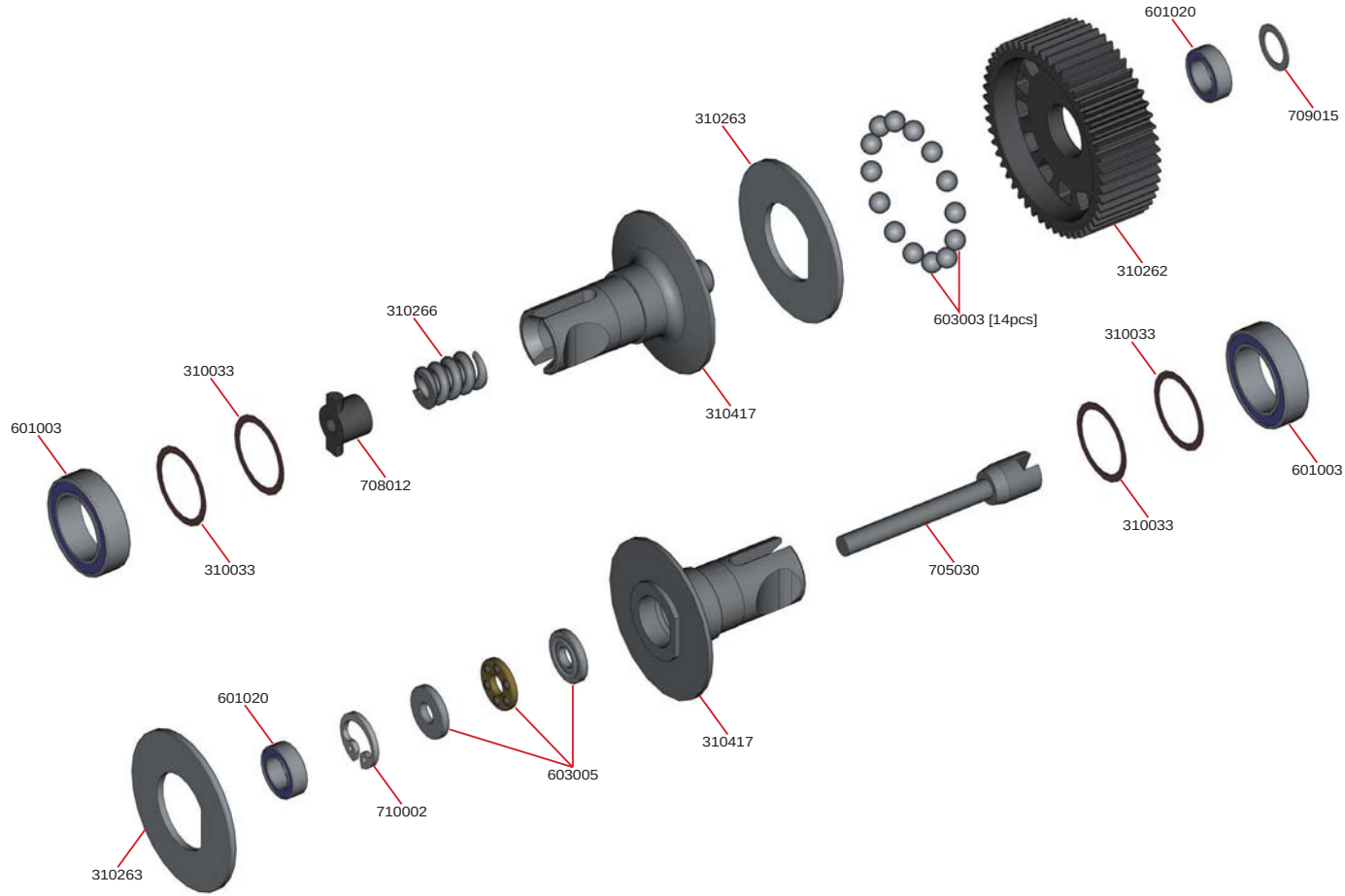

Gearbox

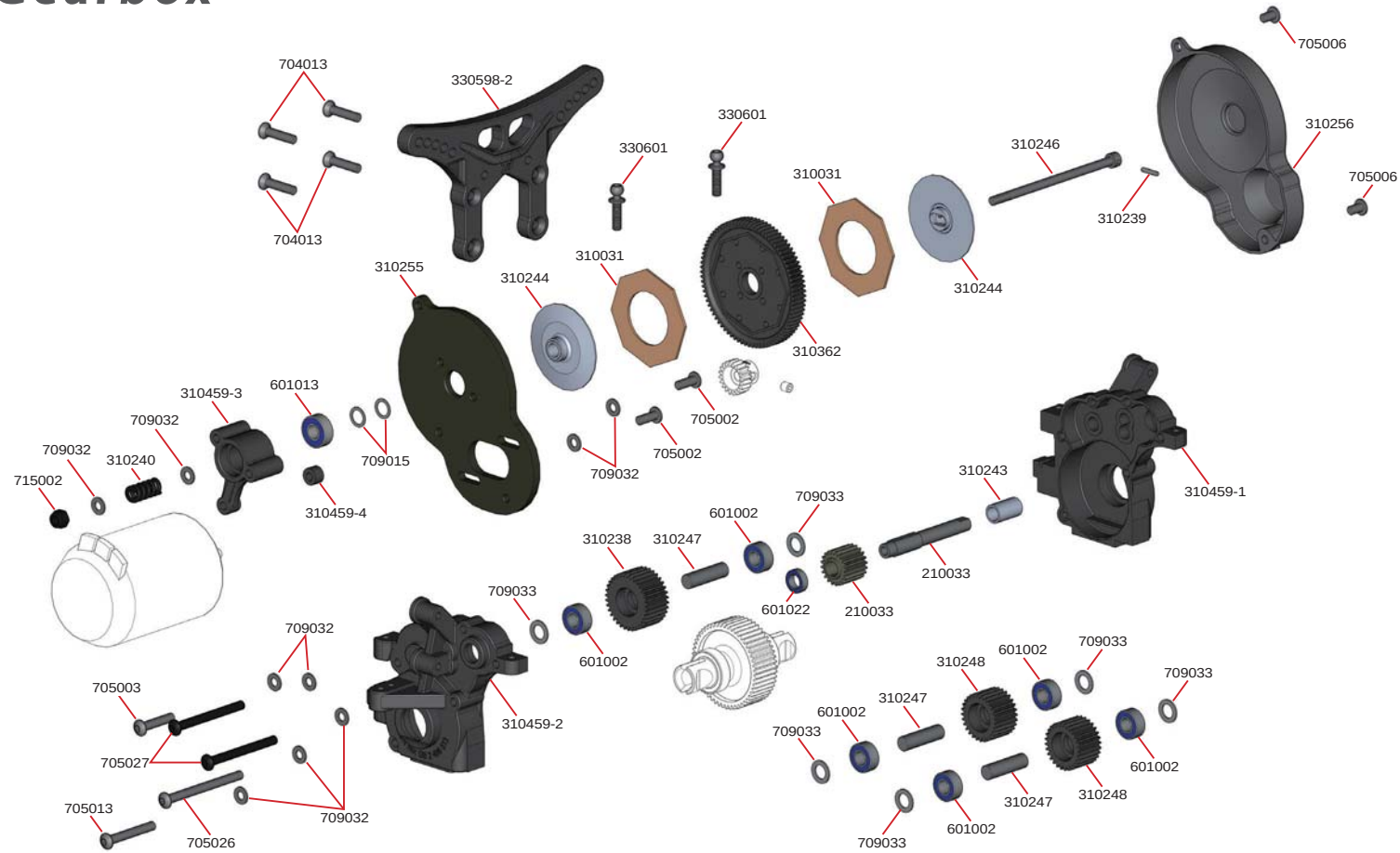
704013
330598-2
704013
330601
330601
310031
310246
705006
310256
705006
310239
310255
310244
310031
310244
310362
705002
705002
709032
310459-3
601013
709032
709015
709032
310240
715002
310459-4
310243
310459-1
601002
709033
310238
310247
210033
601022
210033
709033
601002
709032
705003
310459-2
705027
705013
705026
709032
601002
709033
310248
310247
601002
709033
709033
601002
310247
310248
601002
709033

Rear Assembly

705004
705005
705005
320270-3
705014
705005
705005
705003
705004
705005
705003
705002
320126-1
715001
320270-1
705003
715028
715001
330712-2
705005
320128-4
320227-1
320269-1
330599
330037
330578-1
310459-4
330350
330363-1
320128-1
320270-5
330712-1
705029
709032
701001
330351
705029
320270-5
704059
704007
704006
704006
704007
704007
704006
704007
704007
330363-1

Rear Assembly

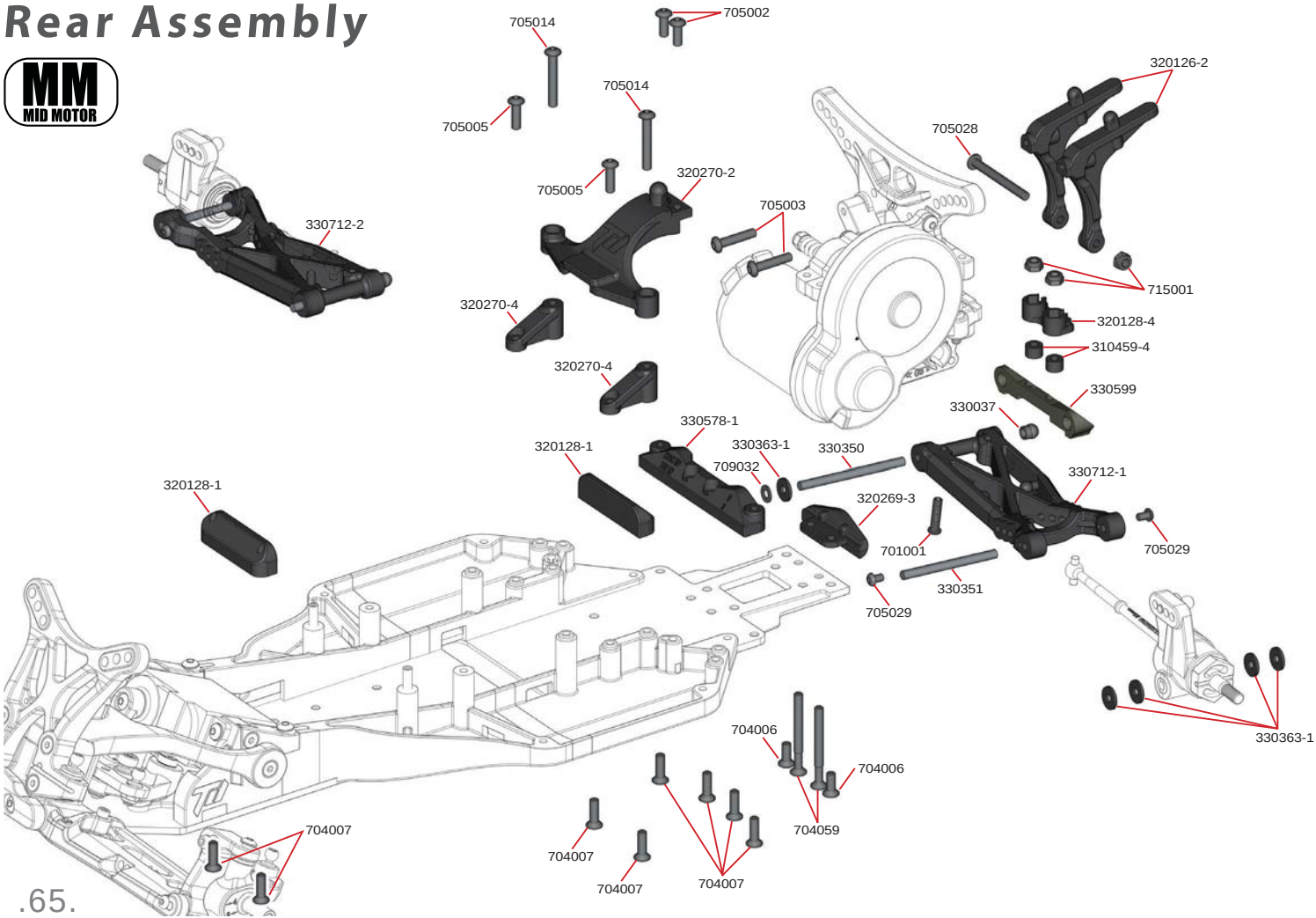

Shock Assembly

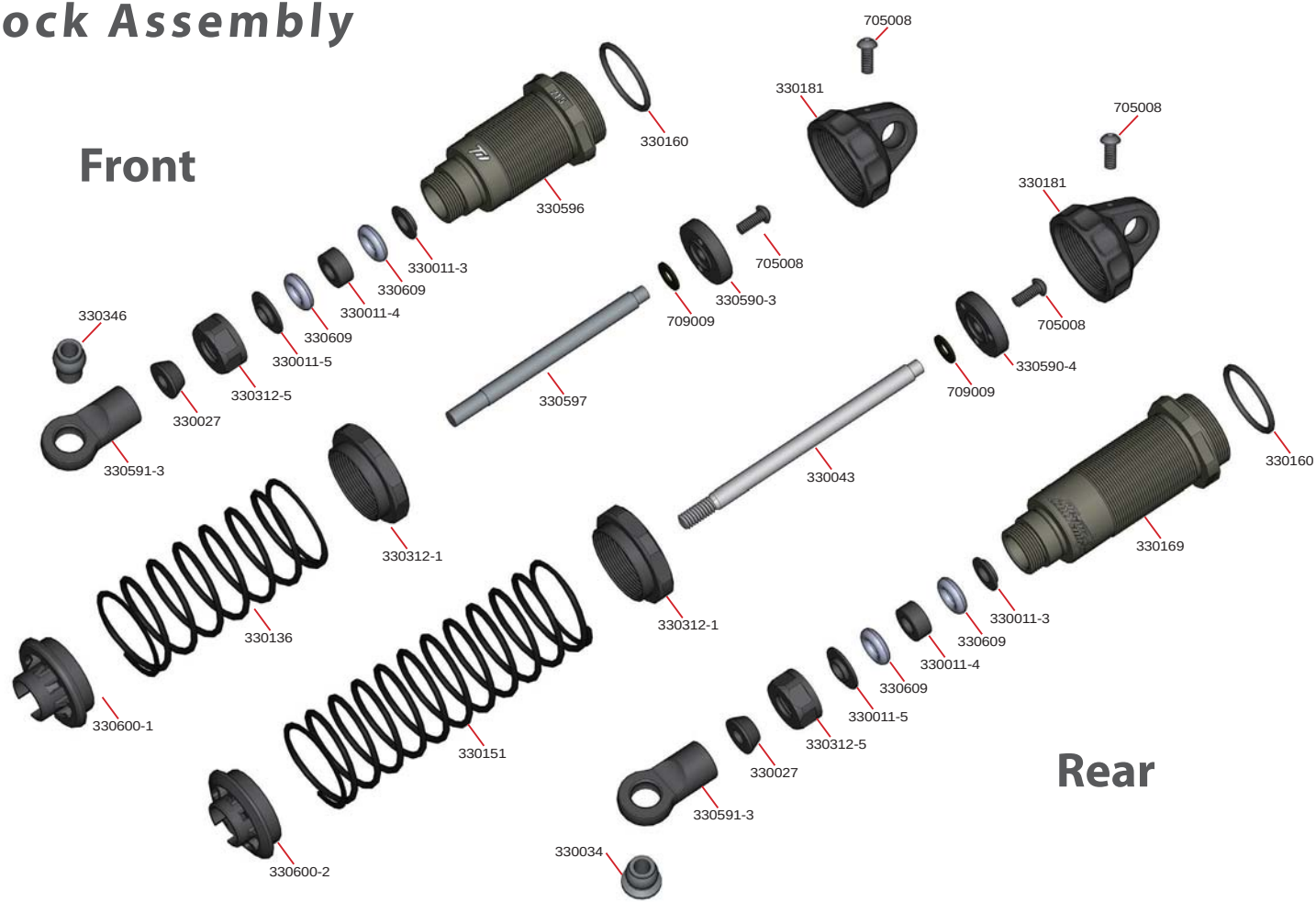

Front Shock Tower Assembly

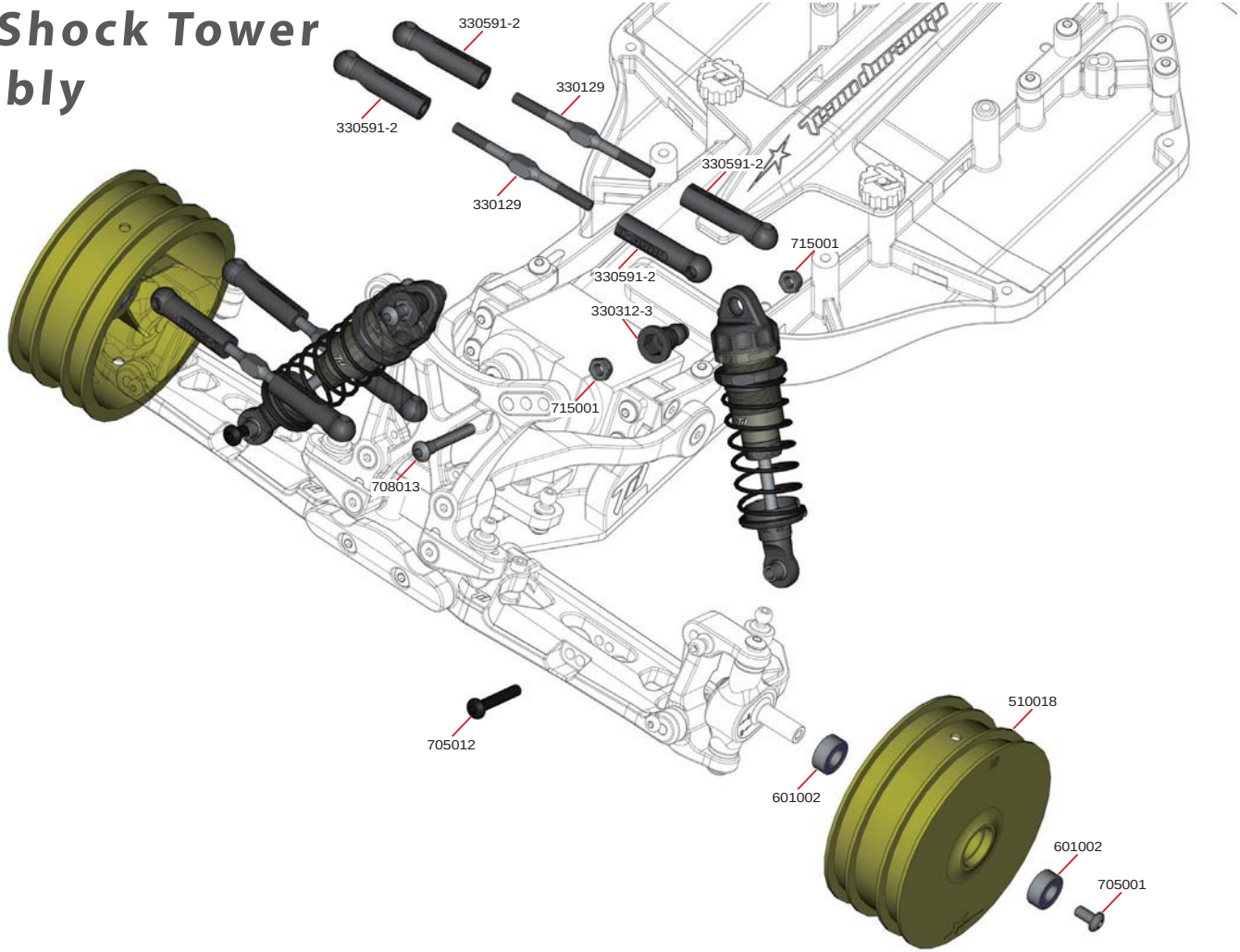

Rear Shock Tower Assembly

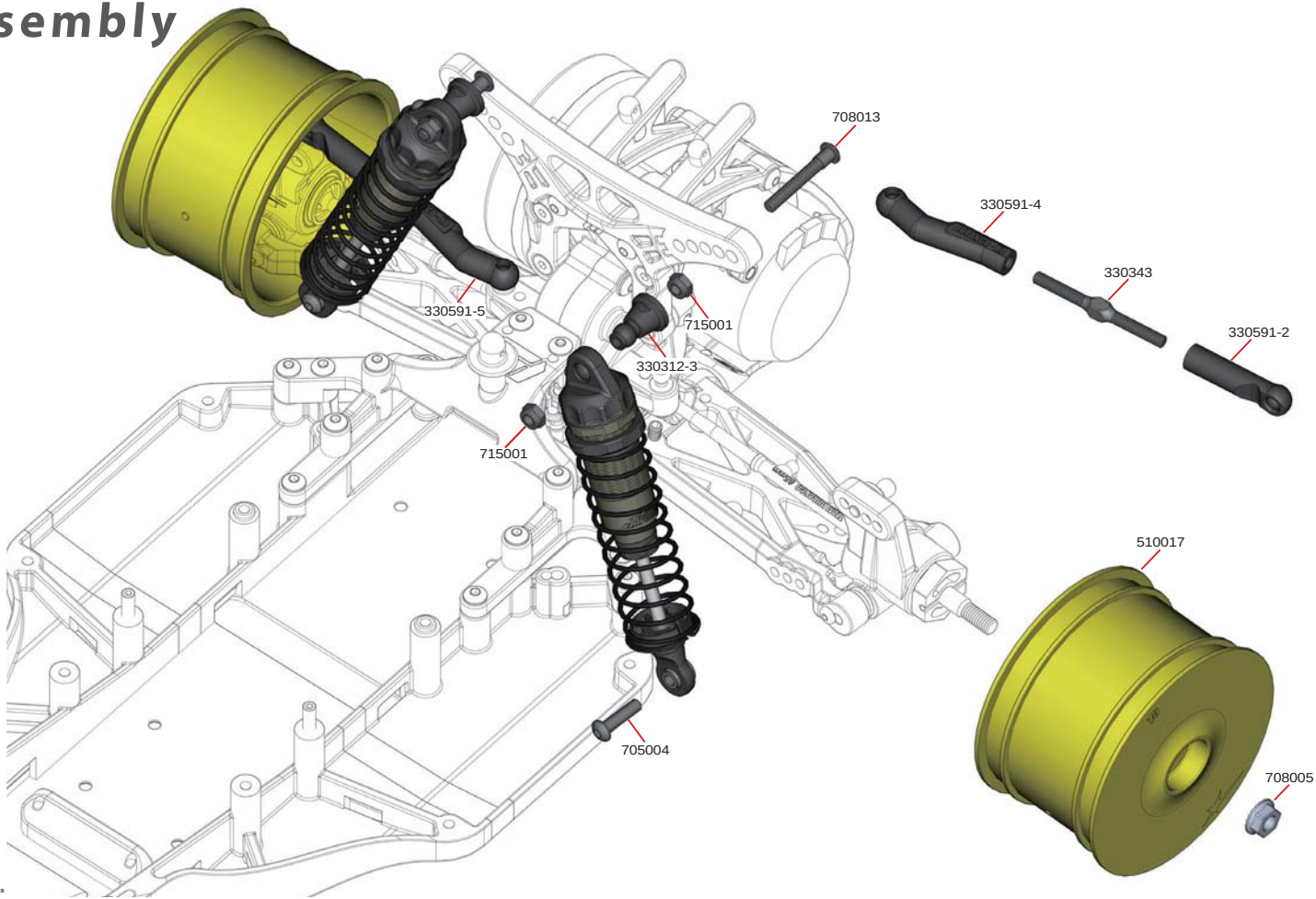

Final Assembly

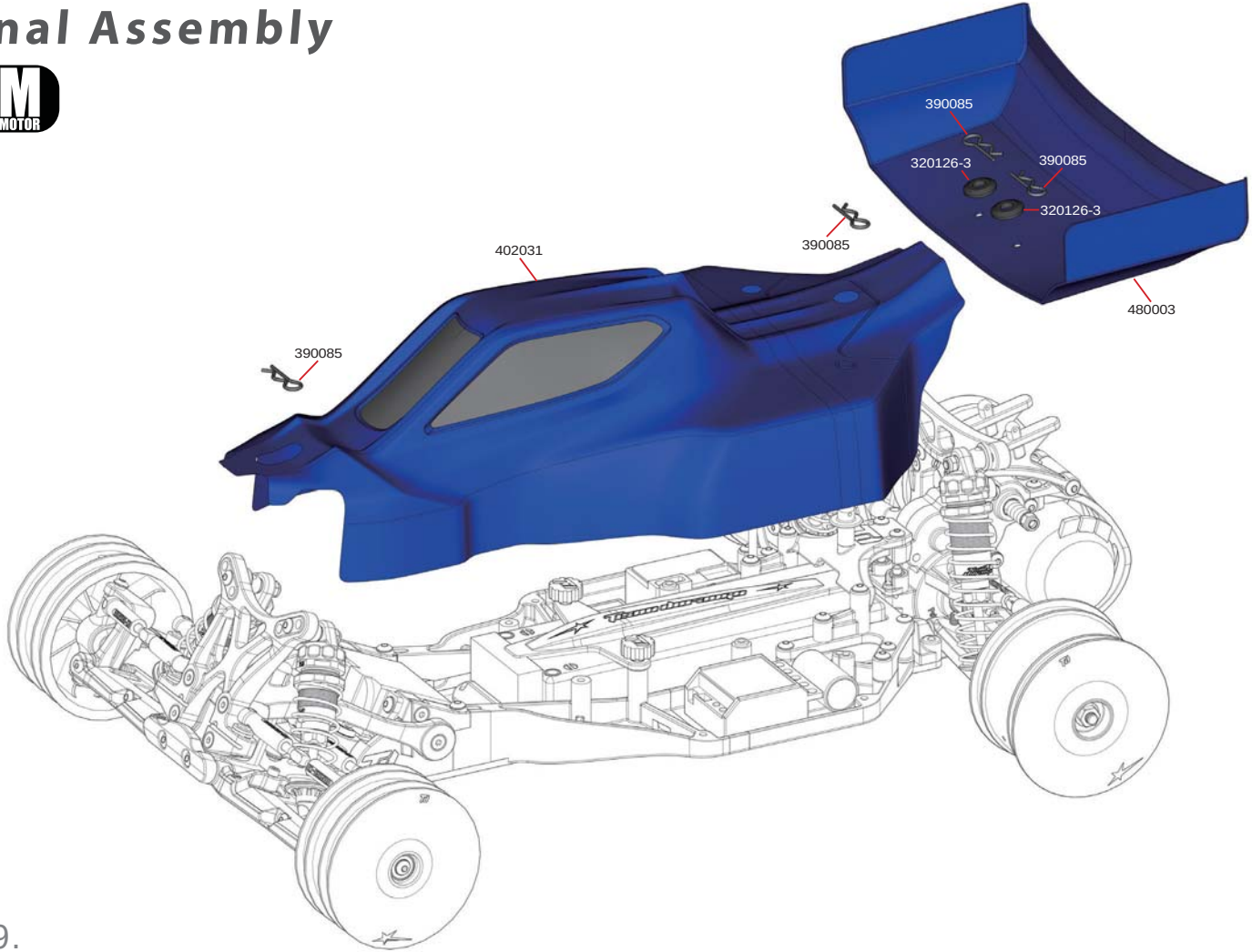

Final Assembly

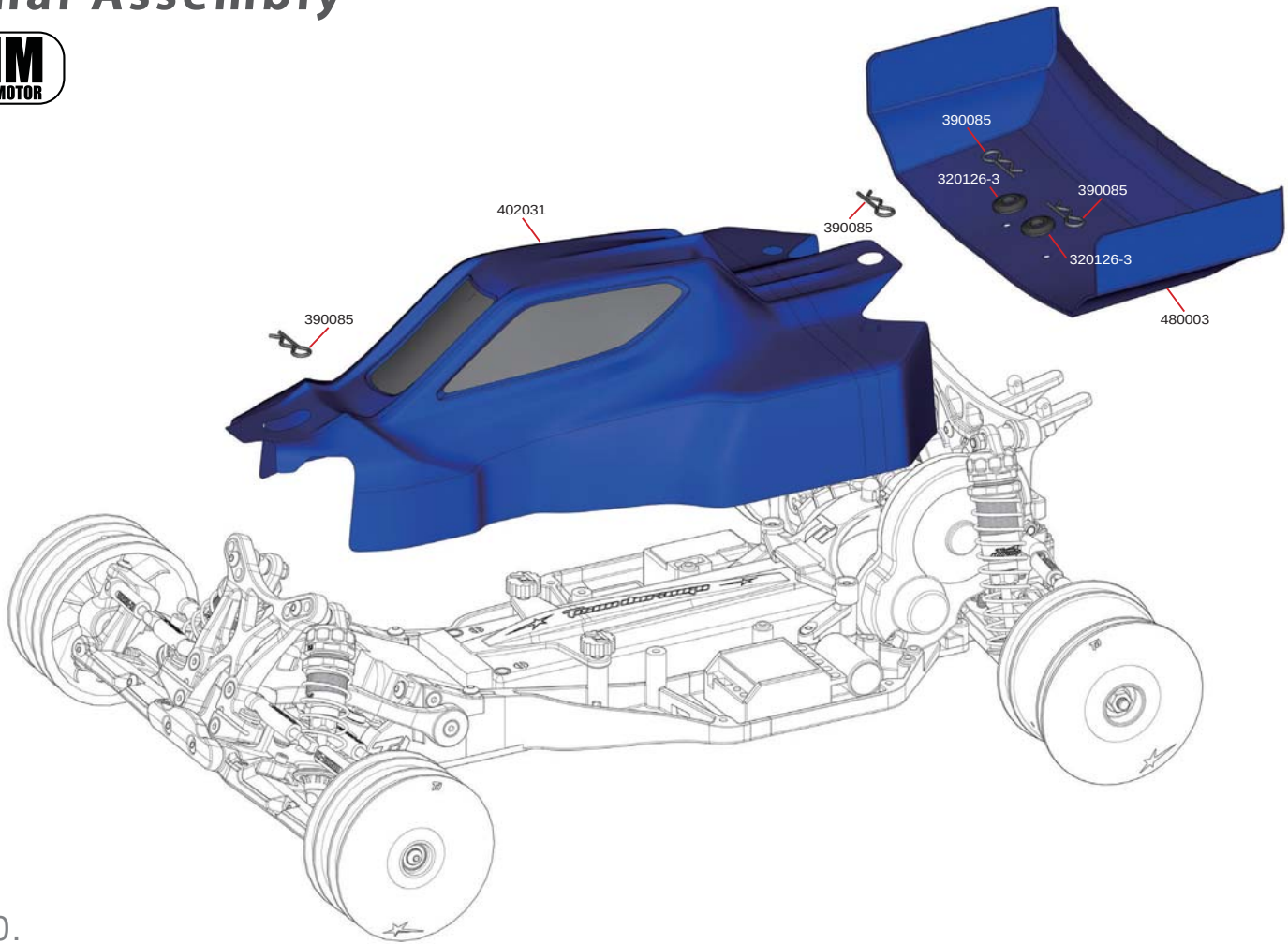

Parts List-Standard Parts

Parts#	Description
TD210033	LAYSHAFT SET
TD220005	BALL DIFF SET
TD310031	SLIPPER CLUTCH PAD (2pcs)
TD310113	DRIVESHAFT BUSHING (2.0mm) (DEX410R/2010 Spec) (2pcs)
TD310123	DRIVESHAFT PIN A-TYPE 2.0mm (10pcs)
TD310135	ROLL PIN 1.6x14mm (DEX410R/2010 Spec) (10 pcs)
TD310238	IDLER GEAR SET
TD310239	PIN 1.5x7mm (10pcs)
TD310240	SLIPPER CLUTCH SPRING
TD310244	SLIPPER HUB SET (1pr)
TD310246	SLIPPER SHAFT
TD310247	IDLER GEAR PIN (2pcs)
TD310254	REAR AXLE (2pcs)
TD310255	ALUMINIUM MOTOR PLATE
TD310256	GEAR COVER
TD310262	BALL DIFF MAIN GEAR
TD310263	BALL DIFF PLATES (2pcs)
TD310264	BALL DIFF OUTDRIVES (LIGHTWEIGHT - SHORT) (1pr)
TD310266	BALL DIFF SCREW, SPRING AND NUT
TD310362	SPUR GEAR 81T (48DP)
TD310417	BALL DIFF OUTDRIVES (LONG) (1pr)
TD310459	GEARBOX SET (TYPE B)
TD320123	FRONT TOP DECK
TD320124	STEERING AND SERVO HORN SET
TD320126	WING MOUNTS
TD320128	BATTERY STRAP & ANTI-ROLL BAR MOUNT SET
TD320157	ALUMINIUM STEERING PLATE
TD320215	CHASSIS SIDE POD SET (+8mm)
TD320227	MOTOR GUARD (Type B)
TD320240	MAIN CHASSIS PLATE (+8mm) (TYPE B)
TD320269	BUMPER & REAR TOP DECK SET (TYPE B)
TD320270	REAR CHASSIS BRACE SET (Type B)
TD330011	SHOCK CARTRIDGE & PISTON SET (4pcs)
TD330027	SHOCK STOPPER: RUBBER (4pcs)
TD330033	PIVOT BALL A-TYPE (4pcs)
TD330034	PIVOT BALL B-TYPE (4pcs)
TD330037	SUSPENSION ARM PIVOT-BALL (8PCS)

Parts#	Description
TD330129	TURNBUCKLE - STEEL (M3x43mm) (2pcs)
TD330169	BIG BORE SHOCK BODY: 31mm STROKE (1pc)
TD330181	BIG BORE SHOCK CAP (4pcs)
TD330312	PLASTIC SHOCK COLLARS,14mm HEXES & SHOCK STAND OFF SET
TD330339	STEERING KNUCKLE & HUB SET
TD330340	HUB & KNUCKLE INSERT SET
TD330343	TURNBUCKLE M3x36mm (2pcs)
TD330346	SHOCK ROD END PIVOT BALL (LONG)
TD330348	ALUMINIUM FRONT HINGE PIN BRACE
TD330349	ALUMINIUM FRONT AXLE (2pcs)
TD330350	HINGE PIN: REAR SUSPENSION INNER (41mm 2pcs)
TD330351	HINGE PIN: REAR SUSPENSION OUTER (37mm 2pcs)
TD330352	HINGE PIN: FRONT SUSPENSION INNER (35mm 2pcs)
TD330353	HINGE PIN: FRONT SUSPENSION OUTER (25mm 2pcs)
TD330363	PLASTIC SPACER SET
TD330591	DIMEC X BALL END SET (BLACK)
TD330594	SUSPENSION ARMS FRONT: 1 pair LEFT & RIGHT (TYPE B)
TD330596	BIG BORE SHOCK BODY: 21.5mm STROKE (1pc)
TD330597	SHOCK SHAFT : FRONT (42.5mm 2PCS)
TD330598	SHOCK TOWER SET (TYPE B)
TD330599	RR SUSPENSION HANGER -2mm LRC (3 Degree) (Type B)
TD330600	BIG BORE SPRING RETAINER (TYPE B)
TD330601	2mm HEX BALL M3x10mm (4pcs)
TD330602	2mm HEX BALL M3x7mm (4pcs)
TD330609	SILICONE O-RING P-3 (3x2mm 8pcs) (S40 PURPLE)
TD330712	SUSPENSION ARMS REAR: 1 pair LEFT & RIGHT (TYPE B)
TD340004	STEERING KNUCKLE BUSHING (4pcs)
TD390001	ANTENNA TUBE & CAP (1pc)
TD480003	STRAIGHT WING
TD510017	WHEEL RIM REAR: 14mm HEX YELLOW (2pcs)
TD510018	2WD WHEEL RIM FRONT: YELLOW (2pcs)
TD601002	BALL BEARING : 4PCS (5x10x4mm)
TD601003	BALL BEARING : 4PCS (10x15x4mm)
TD601013	BALL BEARING: 4PCS (5x11x4mm)
TD601017	BALL BEARING : 2PCS (5x13x4mm)
TD601020	BALL BEARING : 2PCS (5x8x2.5mm)
TD601022	BALL BEARING : 4PCS (5x8x2.5mm)
TD601023	BALL BEARING : 4PCS (3x7x3mm)
TD603003	3mm DIFF BALLS (14pcs)

Parts#	Description
TD603005	CAGED THRUST RACE
TD701001	DROOP SCREW M3x13MM (10pcs)
TD701004	SETSCREW M3x3mm (10pcs)
TD701007	SETSCREW M3x12mm (10pcs)
TD701008	SETSCREW M3x16mm (10pcs)
TD701010	SETSCREW M4x8mm (10pcs)
TD704001	FLAT HEAD HEX CS SCREW M3x18mm (10pcs)
TD704004	FLAT HEAD HEX CS SCREW M3x6mm (10pcs)
TD704007	FLAT HEAD HEX CS SCREW M3x10mm (10pcs)
TD704013	FLAT HEAD HEX CS SCREW M3x14mm (10pcs)
TD704054	FLAT HEAD HEX CS SCREW M3x30mm (10pcs)
TD705001	BUTTON HEAD HEX SCREW M3x6mm (10pcs)
TD705002	BUTTON HEAD HEX SCREW M3x8mm (10pcs)
TD705003	BUTTON HEAD HEX SCREW M3x15mm (10pcs)
TD705004	BUTTON HEAD HEX SCREW M3x12mm (10pcs)
TD705005	BUTTON HEAD HEX SCREW M3x10mm (10pcs)
TD705007	BUTTON HEAD HEX SCREW M3x4mm (10pcs)
TD705008	BUTTON HEAD HEX SCREW M2x5mm (10pcs)
TD705010	BUTTON HEAD HEX SCREW M3x25mm (10pcs)
TD705011	BUTTON HEAD HEX SCREW M3x14mm (10pcs)
TD705013	BUTTON HEAD HEX SCREW M3x22mm (10pcs)
TD705014	BUTTON HEAD HEX SCREW M3x20mm (10pcs)
TD705026	BUTTON HEAD HEX SCREW M3x36mm (10pcs)
TD705027	BUTTON HEAD HEX SCREW M3x32mm (10pcs)
TD705028	BUTTON HEAD HEX SCREW M3x30mm (10pcs)
TD705029	BUTTON HEAD HEX SCREW M2.5x4mm (10pcs)
TD708005	M4 SERRATED LOCK NUT FOR WHEELS (DEX410R/2010 Spec) (10pcs)
TD708013	SHOCK MOUNT SCREW M3 x24mm (4pcs)
TD709001	SHIM 5x10x0.8mm (10pcs)
TD709002	SHIM 4x8x0.3mm (10pcs)
TD709009	SHOCK PISTON WASHER: CHROME 2.5mmID (10pcs)
TD709015	DISTANCE SHIM 5x7x0.2 (10pcs)
TD709018	DISTANCE SHIM: STEERING PLATE 3.0x5.0x0.1mm (10pcs)
TD709032	STEEL SHIM 6x3x0.5mm (20pcs)
TD710002	CIRCLIP 8x0.8mm (4pcs)
TD715001	LOCK NUT M3: LOW PROFILE (10pcs)
TD715002	LOCKNUT M3: STANDARD (10PCS)
TD490037	DEX210 DECAL SHEET
TD402031	DEX210 CAB FORWARD BODY SET (Includes DECALS & MASKS)

Parts List-Option Parts

Parts#	Description
TD210034	GEAR DIFF SET
TD210038	CVD REBUILD KIT (2.Omm)
TD230004	1/10 ELECTRIC BIG BORE SHOCK SET: 23mm STROKE
TD230027	BIG BORE SPRING SET: 45mm LENGTH (8 Pairs)
TD230028	BIG BORE SPRING SET: 65mm LENGTH (8 Pairs)
TD230029	BIG BORE SPRING SET: HARD 45mm LENGTH (8 Pairs)
TD230034	BB ALUMINIUM SHOCK CAP SET (BLACK)
TD230035	BB ALUMINIUM SHOCK CAP SET (OLIVE)
TD310001	DIFF. GEAR 14T (2pcs)
TD310002	GEARED DIFF. AXLE (2pcs)
TD310003	DIFF. GEAR 9T (4pcs)
TD310020	SPUR GEAR 87T (48DP)
TD310226	ALLOY WHEEL HEX (14mm)(2pcs)(GOLD)
TD310243	LAYSHAFT SPACER (1pc)
TD310249	GEAR DIFF MAIN GEAR SET
TD310251	GEAR DIFF MAIN SEAL (4pcs)
TD310252	GEAR DIFF OUTDRIVES (2pcs)
TD310253	DRIVE SHAFT 65mm (2pcs)
TD310257	GEARBOX SET
TD310258	DRIVESHAFT BOOT OUTDRIVE (2pcs)
TD310259	DRIVESHAFT BOOT WHEEL AXLE (2pcs)
TD310272	VENTED SLIPPER PLATE SET
TD310274	ALUMINIUM CVD AXLES (2pcs)
TD310275	LIGHTWEIGHT DIFF OUTDRIVES (2pcs)
TD310276	HEATSINK MOTOR PLATE
TD310290	MOULDED CROSS SHAFT AND GEAR SET (3 Diffs)
TD310310	MACHINED SPUR GEAR 75T (48DP)
TD310311	MACHINED SPUR GEAR 78T (48DP)
TD310312	MACHINED SPUR GEAR 81T (48DP)
TD310313	MACHINED SPUR GEAR 84T (48DP)
TD310314	MACHINED SPUR GEAR 87T (48DP)
TD310315	15T 48DP PINION - STEEL
TD310316	16T 48DP PINION - STEEL
TD310317	17T 48DP PINION - STEEL
TD310318	18T 48DP PINION - STEEL
TD310319	19T 48DP PINION - STEEL
TD310320	20T 48DP PINION - STEEL
TD310321	21T 48DP PINION - STEEL
TD310322	22T 48DP PINION - STEEL
TD310323	23T 48DP PINION - STEEL

Parts#	Description
TD310324	24T 48DP PINION - STEEL
TD310325	25T 48DP PINION - STEEL
TD310326	26T 48DP PINION - STEEL
TD310327	27T 48DP PINION - STEEL
TD310328	28T 48DP PINION - STEEL
TD310329	29T 48DP PINION - STEEL
TD310330	30T 48DP PINION - STEEL
TD310338	15T 48DP PINION - ALUMINIUM
TD310339	16T 48DP PINION - ALUMINIUM
TD310340	17T 48DP PINION - ALUMINIUM
TD310341	18T 48DP PINION - ALUMINIUM
TD310342	19T 48DP PINION - ALUMINIUM
TD310343	20T 48DP PINION - ALUMINIUM
TD310344	21T 48DP PINION - ALUMINIUM
TD310345	22T 48DP PINION - ALUMINIUM
TD310346	23T 48DP PINION - ALUMINIUM
TD310347	24T 48DP PINION - ALUMINIUM
TD310348	25T 48DP PINION - ALUMINIUM
TD310349	26T 48DP PINION - ALUMINIUM
TD310350	27T 48DP PINION - ALUMINIUM
TD310351	28T 48DP PINION - ALUMINIUM
TD310352	29T 48DP PINION - ALUMINIUM
TD310353	30T 48DP PINION - ALUMINIUM
TD310395	ALLOY WHEEL HEX (14mm)(2pcs)(BLACK)
TD310396	ALLOY WHEEL HEX (14mm)(2pcs)(RED)
TD310397	ALLOY WHEEL HEX (14mm)(2pcs)(OLIVE)
TD310441	MACHINED SPUR GEAR 72T (48DP)
TD310442	MACHINED SPUR GEAR 69T (48DP)
TD320121	BUMPER & REAR TOP DECK SET
TD320122	CHASSIS SIDE POD SET
TD320125	MAIN CHASSIS PLATE
TD320127	REAR CHASSIS BRACE SET
TD320129	REAR BUMPER (REAR MOTOR)
TD320130	NOSE WEIGHT 30g
TD320131	NOSE WEIGHT 15g
TD320162	SERVO SAVER SET (10th SCALE)
TD320163	DIMEC DEX210 CHASSIS (+8mm)
TD320194	ALUMINIUM FRONT BULKHEAD BUTTON (2pcs)(BLACK)
TD320195	ALUMINIUM FRONT BULKHEAD BUTTON (2pcs)(GOLD)
TD320196	ALUMINIUM FRONT BULKHEAD BUTTON (2pcs)(RED)
TD320197	ALUMINIUM FRONT BULKHEAD BUTTON (2pcs)(OLIVE)
TD320202	ALUMINIUM WING BUTTON (2pcs) (BLACK)

Parts#	Description
TD320203	ALUMINIUM WING BUTTON (2pcs) (GOLD)
TD320204	ALUMINIUM WING BUTTON (2pcs) (RED)
TD320205	ALUMINIUM WING BUTTON (2pcs) (OLIVE)
TD320206	ALUMINIUM THUMB NUT (2pcs)(BLACK)
TD320207	ALUMINIUM THUMB NUT (2pcs)(GOLD)
TD320208	ALUMINIUM THUMB NUT (2pcs)(RED)
TD320209	ALUMINIUM THUMB NUT (2pcs)(OLIVE)
TD320220	DIMEC20 CHASSIS DEX210 (+8mm)
TD320229	DIMEC CHASSIS DEX210 (+8mm) (Type B)
TD320247	DIMEC20 CHASSIS DEX210 (+8mm) (Type B)
TD330017	SHOCK BOOT: REAR (2pcs)
TD330018	SHOCK BOOT: FRONT (2pcs)
TD330023	SHOCK SEAL CAP ALUMINIUM (1pc)(RED)
TD330030	SHOCK O-RING (8pcs)
TD330032	SHOCK MOUNT REAR (2pcs)
TD330035	PIVOT BALL C-TYPE (4pcs)
TD330042	SHOCK SHAFT : FRONT (44mm 2PCS)
TD330045	TURNBUCKLE TITANIUM (M3x43mm 2pcs)
TD330046	TURNBUCKLE TITANIUM (M3x28mm 2pcs)
TD330136	BIG BORE SHOCK SPRINGS: 45mm BLACK (49gf/mm)(2pcs)
TD330137	BIG BORE SHOCK SPRINGS: 45mm DARK BLUE (62gf/mm)(2pcs)
TD330138	BIG BORE SHOCK SPRINGS: 45mm DARK GREEN (58gf/mm)(2pcs)
TD330139	BIG BORE SHOCK SPRINGS: 45mm DARK RED (66gf/mm)(2pcs)
TD330140	BIG BORE SHOCK SPRINGS: 45mm GREY (32gf/mm)(2pcs)
TD330141	BIG BORE SHOCK SPRINGS: 45mm LIGHT BLUE (44gf/mm)(2pcs)
TD330142	BIG BORE SHOCK SPRINGS: 45mm LIGHT GREEN (41gf/mm)(2pcs)
TD330143	BIG BORE SHOCK SPRINGS: 45mm LIGHT RED (47gf/mm)(2pcs)
TD330146	BIG BORE SHOCK SPRINGS: 65mm BLACK (38gf/mm)(2pcs)
TD330147	BIG BORE SHOCK SPRINGS: 65mm DARK BLUE(43gf/mm)(2pcs)
TD330148	BIG BORE SHOCK SPRINGS: 65mm DARK GREEN (39gf/mm)(2pcs)
TD330149	BIG BORE SHOCK SPRINGS: 65mm DARK RED (48gf/mm)(2pcs)
TD330150	BIG BORE SHOCK SPRINGS: 65mm GREY (28gf/mm)(2pcs)
TD330151	BIG BORE SHOCK SPRINGS: 65mm LIGHT BLUE (32gf/mm)(2pcs)
TD330152	BIG BORE SHOCK SPRINGS: 65mm LIGHT GREEN (29gf/mm)(2pcs)
TD330153	BIG BORE SHOCK SPRINGS: 65mm LIGHT RED (35gf/mm)(2pcs)
TD330154	BIG BORE SHOCK BODY: 23mm STROKE (1pc)
TD330157	BIG BORE SHOCK PISTON SET (4 SHOCKS)
TD330161	BIG BORE SHOCK PRELOAD NUT ALUMINIUM (2pcs)
TD330162	BIG BORE SHOCK PRELOAD NUT O-RING (4pcs)
TD330178	BIG BORE TAPER PISTONS (4 x 1.0mm HOLES) (4pcs)
TD330179	BIG BORE TAPER PISTONS (5 x 1.0mm HOLES) (4pcs)
TD330180	BIG BORE TAPER PISTONS (6 x 1.0mm HOLES) (4pcs)

Parts#	Description
TD330257	TITANIUM NITRIDE FRONT SHOCK SHAFT (44MM) BLACK (2pcs)
TD330279	BIG BORE SHOCK SPRINGS: 45mm YELLOW (72gf/mm)
TD330280	BIG BORE SHOCK SPRINGS: 45mm PURPLE (78gf/mm)(2pcs)
TD330281	BIG BORE SHOCK SPRINGS: 45mm LIGHT BROWN (86gf/mm)
TD330282	BIG BORE SHOCK SPRINGS: 45mm OLIVE GREEN (85gf/mm)(2pcs)
TD330283	BIG BORE SHOCK SPRINGS: 45mm ORANGE (91gf/mm)(2pcs)
TD330284	BIG BORE SHOCK SPRINGS: 45mm BORDEAUX (99gf/mm)(2pcs)
TD330285	BIG BORE SHOCK SPRINGS: 45mm DARK BROWN (104gf/mm)(2pcs)
TD330286	BIG BORE SHOCK SPRINGS: 45mm NIGHT BLUE (108gf/mm)(2pcs)
TD330293	HD BALL END SET (Black)
TD330331	TITANIUM NITRIDE FRONT SHOCK SHAFT (44MM) GOLD (2pcs)
TD330337	SUSPENSION ARMS FRONT: 1 pair LEFT & RIGHT
TD330338	SUSPENSION ARMS REAR: 1 pair LEFT & RIGHT
TD330341	FRONT BULKHEAD & RF SUSPENSION MOUNT SET
TD330342	SHOCK TOWER SET
TD330344	RR SUSPENSION HANGER (3 Degree)
TD330345	SHOCK SHAFT: REAR (55mm 2pcs)
TD330347	PIVOT BALL C-TYPE 10mm (4pcs)
TD330377	ALUMINIUM REAR HUB CARRIERS (1 pair)
TD330394	BIG BORE DUAL TAPER PISTONS (4 x 1.0mm HOLES) (4pcs)
TD330395	BIG BORE DUAL TAPER PISTONS (5 x 1.0mm HOLES) (4pcs)
TD330396	BIG BORE DUAL TAPER PISTONS (6 x 1.0mm HOLES) (4pcs)
TD330399	STEEL FRONT AXLE (2pcs)
TD330400	DEX210 Imperial Steel Front Axle (Pair)
TD330453	BIG BORE SHOCK SPRINGS: 65mm WHITE SERIES YELLOW (51gf/mm)(2pcs)
TD330454	BIG BORE SHOCK SPRINGS: 65mm WHITE SERIES PURPLE (54gf/mm)(2pcs)
TD330455	BIG BORE SHOCK SPRINGS: 65mm WHITE SERIES LIGHT BROWN (58gf/mm)(2pcs)
TD330456	BIG BORE SHOCK SPRINGS: 65mm WHITE SERIES OLIVE GREEN (62gf/mm)(2pcs)
TD330457	BIG BORE SHOCK SPRINGS: 65mm WHITE SERIES ORANGE (67gf/mm)(2pcs)
TD330458	BIG BORE SHOCK SPRINGS: 65mm WHITE SERIES BORDEAUX (72gf/mm)(2pcs)
TD330459	BIG BORE SHOCK SPRINGS: 65mm WHITE SERIES DARK BROWN (79gf/mm)(2pcs)
TD330460	BIG BORE SHOCK SPRINGS: 65mm WHITE SERIES NIGHT BLUE (87gf/mm)(2pcs)
TD330461	BIG BORE SHOCK SPRINGS: 45mm WHITE SERIES YELLOW (111gf/mm)(2pcs)
TD330462	BIG BORE SHOCK SPRINGS: 45mm WHITE SERIES PURPLE (115gf/mm)(2pcs)
TD330463	BIG BORE SHOCK SPRINGS: 45mm WHITE SERIES LIGHT BROWN (119gf/mm)(2pcs)
TD330464	BIG BORE SHOCK SPRINGS: 45mm WHITE SERIES OLIVE GREEN (123gf/mm)(2pcs)
TD330465	BIG BORE SHOCK SPRINGS: 45mm WHITE SERIES ORANGE (128gf/mm)(2pcs)
TD330466	BIG BORE SHOCK SPRINGS: 45mm WHITE SERIES BORDEAUX (134gf/mm)(2pcs)
TD330467	BIG BORE SHOCK SPRINGS: 45mm WHITE SERIES DARK BROWN (140gf/mm)(2pcs)
TD330468	BIG BORE SHOCK SPRINGS: 45mm WHITE SERIES NIGHT BLUE (146gf/mm)(2pcs)
TD330554	BIG BORE SHOCK PRELOAD NUT ALUMINIUM & O-RING (2pcs) (GOLD)
TD330555	BIG BORE SHOCK PRELOAD NUT ALUMINIUM & O-RING (2pcs) (RED)

Parts#	Description
TD330556	BIG BORE SHOCK PRELOAD NUT ALUMINIUM & O-RING (2pcs) (OLIVE)
TD330561	SHOCK CAP INSERT (8pcs)
TD330562	SHOCK SEAL CAP ALUMINIUM (1pc) (BLACK)
TD330563	SHOCK SEAL CAP ALUMINIUM (1pc) (GOLD)
TD330564	SHOCK SEAL CAP ALUMINIUM (1pc) (OLIVE)
TD330576	PIVOT BALL (3.5*6mm 4pcs)
TD330577	PIVOT BALL (3*6mm 4pcs)
TD330578	FRONT BULKHEAD & SUSPENSION MOUNT SET (Type B)
TD330579	RR SUSPENSION HANGER (3 Degree) (Type B)
TD330590	BIG BORE SHOCK PISTON SET (Spec B)
TD330608	SILICONE O-RING P-3 (3x2mm 8pcs) (S30 BLUE)
TD330610	SILICONE O-RING P-3 (3x2mm 8pcs) (S50 CLEAR)
TD390003	BODY CLIP SMALL (10pcs)
TD390026	SPRING RETAINER, BATTERY HOLDER DISTANCE BUSHING & SHIM SET
TD402012	DEX210 CAB FORWARD BODY (+8mm) (Includes DECALS & MASKS)
TD490020	DEX210 DECAL SHEET
TD510015	WHEEL RIM REAR: 14mm HEX WHITE (2pcs)
TD510020	2WD WHEEL RIM FRONT: WHITE (2pcs)
TD704008	FLAT HEAD HEX CS SCREW M2x10mm (10pcs)
TD709003	ALUMINIUM SPACER 8x3x1.00mm (4pcs)(GOLD)
TD709004	ALUMINIUM SPACER 8x3x2.00mm (4pcs)(GOLD)
TD709005	ALUMINIUM SPACER 8x3x2.8mm (10pcs)(GOLD)
TD709007	ALUMINIUM SPACER 6x3x0.50mm (10pcs)(GOLD)
TD709040	ALUMINIUM SPACER 8x3x1.00mm (4pcs)(RED)
TD709041	ALUMINIUM SPACER 8x3x2.00mm (4pcs)(RED)
TD709042	ALUMINIUM SPACER 8x3x2.8mm (4pcs)(RED)
TD709043	ALUMINIUM SPACER 6x3x0.50mm (10pcs)(RED)
TD709044	ALUMINIUM SPACER 8x3x1.00mm (4pcs)(OLIVE)
TD709045	ALUMINIUM SPACER 8x3x2.00mm (4pcs)(OLIVE)
TD709046	ALUMINIUM SPACER 8x3x2.8mm (4pcs)(OLIVE)
TD709047	ALUMINIUM SPACER 6x3x0.50mm (10pcs)(OLIVE)
TD709055	ALUMINIUM SPACER 8x3x0.50mm (4pcs)(GOLD)
TD709056	ALUMINIUM SPACER 8x3x0.50mm (4pcs)(RED)
TD709057	ALUMINIUM SPACER 8x3x0.50mm (4pcs)(OLIVE)
TD709058	SHIM 3.5x8x0.5mm (4pcs) (BLACK)
TD709059	PVC WASHER (2.1*3.5*0.2mm 16pcs) (GREY)
TD710001	E-CLIPS FOR DIFF 4mm ID (10pcs)
TD711001	X-RING FOR DIFF 8.8mmDia (10pcs)
TD712003	WHEEL DISTANCE BUSHING ALUMINIUM 6x5x1.5mm
TD714002	WHEEL CONE REAR (2pcs)
TD709070	DISTANCE SHIM 5x7x0.1 (10pcs)

Team Durango Ltd

Team Durango Ltd is registered in Derbyshire, England, UK

Internet:

www.team-durango.com
support@team-durango.com

The contents of this owner's manual and all associated material are copyright © Team Durango Ltd. No part of this owner's manual or associated material may be reproduced or distributed in any medium or media without the express, written permission of Team Durango Ltd.

Team Durango Ltd

Team Durango Ltd is in Derbyshire, England, Großbritannien registriert

Internet:

www.team-durango.com
support@team-durango.com

Der Inhalt dieser Bauanleitung und alles dazugehörige Material unterstehen dem Copyright Team Durango Ltd. Kein Teil dieser Bauanleitung, oder dazugehöriges Material darf weder kopiert, oder in jegliches Medium vertrieben werden, ohne die schriftliche Zustimmung von Team Durango Ltd.

Team Durango Ltd

Team Durango Ltd 登記住所：Derbyshire, England, UK

ウェブサイト：

www.team-durango.com
support@team-durango.com

本書の内容は著作権法により保護されています。

本書の内容の一部または全部をTeam Durango Ltdによる

書面の許可無しに無断転載する事を禁止します。

Team Durango 連絡信息

Team Durango的联络地址：Derbyshire, England, UK

网络信息：

www.team-durango.com
support@team-durango.com

本说明书与其相关信息内容，其所有权由Team Durango所有。未经Team Durango许可，禁止以任何形式转载

B30015-V1.0

www.team-durango.com

All rights reserved. © Copyright Team Durango 2013.